Computec

CDD5

Computec Door Drive 5

Lift door controller

QUICK REFERENCE

Note: the complete user manual can be downloaded from the website
www.computecelectronics.com

(FW reference version: 03.0x.xxx)

EN	CE			PRJ1166_03_07_03_QR	Rev.02

EN

Reference Codes and Standards

All the references to the Standards and Codes are reported in the user manual.

Door Drive Data

Supply Voltage	[100 ; 240]Vac 1-ph 50-60Hz, (115V – 20%, 230V + 30%)	Vac
Available Peak Output Power	300	VA
Nominal Output Power	200	VA
Operating temperature	[-10; +60]	°C
Humidity	[20;80] non condensing	%
Electrical Protection	Fuse [5x20, 4A] fast on the main power supply line Fuse [5x20, 8A] on battery power line	-
Environmental Protection	IP-54 case	-

Compatible motors data

(Code) Motor Type	Nominal power	Nominal Voltage	Nominal current
(12) GR 63x25 + SG80K (15:1) + Enc100	50VA	24V	2.7A
(13) GR 63x55 + SG120 (15:1) +Enc100	100VA	24V	4.9A
(20) M63x50 + SN40 (15:1) + IGO100/2	100VA	24V	4.9A
(21) M63x25 + SN31 (15:1) + IGO100/2	100VA	24V	2.7A
(23) M48x60 + SN 22,6 (7:1) + IGO100/2	50VA	24V	1.5A
(01) Moog 1Nm (4:1 belt) + Enc500	100VA	24V	2.7A
(01) Siboni 65PC132 (4:1 belt) + Enc500	150VA	24V	2.7A
(02) Moog 2Nm (4:1 belt) + Enc500	200VA	24V	1.5A

Installation

The installation of the drive has to be performed by expert technical personnel, having all the professional requirements expected, based on the active law in the installation country.

Before proceeding with the installation of the device, please verify the necessary safety equipment; check also the necessary instrument to execute all the installation operations. Be sure to work in safe conditions, taking the complete system in inspection mode before starting any activity.

The CDD 5.0 device works inside the complete car door operator, consisting of:

- Mechanical Door Operator: panels, carriages, belt, motor.
- Door drive (the CDD 5.0)
- Parallel interface to the main lift controller

Below it is represented the Device Connection Scheme:

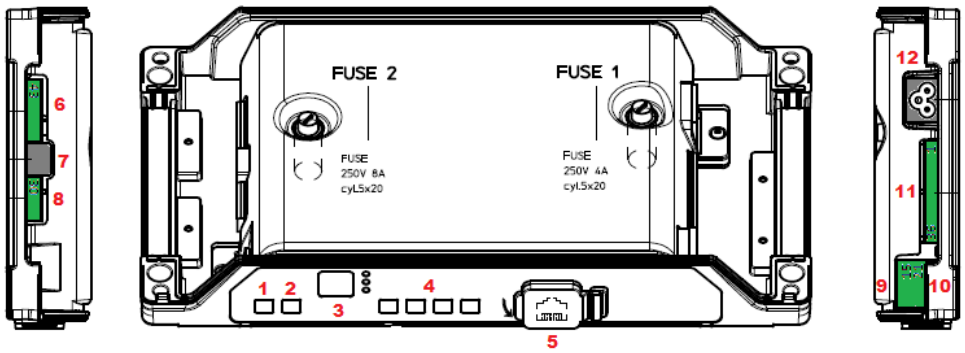

EN

The door controller has:

N°	ID	Descrizione
1	ON	Power on button
2	OFF	Power off button
3	Display	7-segments (2 digits) for the visualization of the door drive status or programming
4	“1” “2” “3” “4”	Functional buttons for visualization/movement/programming
5	X8	external device connection for diagnostic, configuration and upgrade
6	X4	Motor and battery connector
7	X5	RJ45 Motor encoder connector
8	X9	Direct connection for light curtains, including 24Vdc power supply
9	X3.1	Connection of the commands from main lift controller
10	X3.2	Connection of the local contacts installed on the car
11	X2	Connection of the outputs to the main lift controller
12	X1	Connection of the main power supply

Please refer to the self-explicative cover sticker for the connection details.

Preliminary mechanical checks

Before proceeding with the installation of the drive, it is necessary to check the condition of the mechanical door operator: correct installation of the panels, correct installation of the carriages, correct installation of the transmission (belt and belt fixations), correct installation of the gear-motor according to the table reported on the previous page.

Verify that the panels movement results free, without obstacle or friction overall the complete door clearance.

Verify the material of the box: CDD 5.0 door drive, retrofit fixation bracket.

Mechanical installation

The mechanical installation of the door drive has to be executed according to the controller type to replace. For this reason, the CDD 5.0 is supplied with the retrofit fixation bracket. The following table shows the two fixation possibilities:

Installation with retrofit bracket	Direct installation
1. Switch off the main power supply 2. Remove all the connection from the old controller 3. Remove the controller to be replaced 4. Remove the cover of the CDD 5.0. Apply the retrofit bracket to the CDD 5.0 5. Install the controller, using the fixation holes aligned to the holes present on the operator. 6. Apply the previous fixation screws 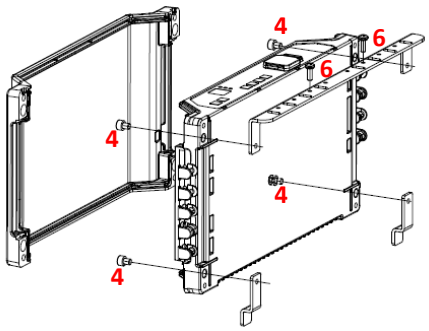	1. Switch off the main power supply 2. Remove all the connection from the old controller 3. Remove the controller to be replaced 4. Remove the cover of the CDD 5.0 5. Apply the drive using the four fixation points present on the operator. 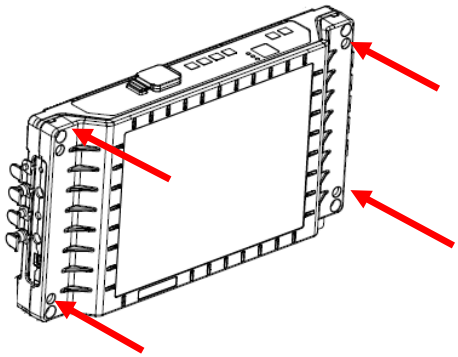

EN

Check of Electrical parts

Verify the presence of the correct supply voltage, as reported in the technical specifications.
Once the mechanical installation of the CDD 5.0 drive is completed, proceed as reported below.

STEP	Operation	Description
0	Preliminary checks	Press OFF button on the door drive front panel. Be sure that no power supply is present.
1	Motor connections 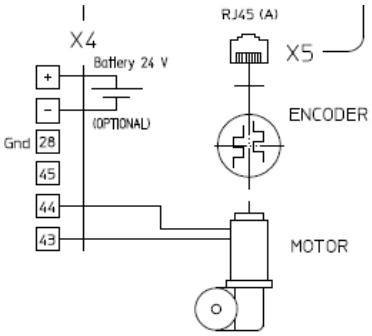 	Connect the motor cable to the pins: - 43: positive, BROWN - 44: negative, WHITE of the X4 connector. Keep in any case the previous connection order, in case no numbering rings are present, or in case the wires colour is different from the one described. Connect the encoder cable with its RJ45 male to the X5 connector. If present, connect the external battery kit to the positive (+) and negative (-) pins of the X4 connector.
2	MLC interface connection 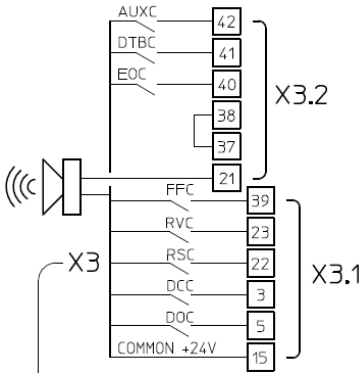 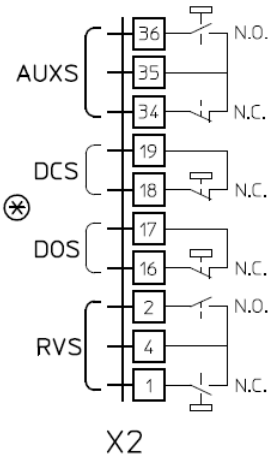 	In case of replacement of different controllers with different plugs proceed as following reported, otherwise plug the previous connectors as they are. Check the common voltage used, and the used contacts: **Common** / **Connections** Controller 24V: Check the presence ot the 37-38 bridge as GND reference External 24V (MLC): Remove the 37-38 bridge, only in case there are no local contact installed on the car roof For further information please refer to the user manual Cconnection of the MLC commands and of the local contacts: **PIN / Name / X3.1 Pin Description** 15 / 24V / Auxiliary CDD 24V, available for MLC commands 5 / DOC / Opening command 3 / DCC / Closing command 22 / RSC / Reduced speed (closing) command 23 / RVC / Reversing command from detector 39 / FFC / Fire-Fighting mode enable input **PIN / Name / X3.2 Pin Description** 42 / AUXC / Programmable Auxiliary input 41 / DTBC / Second TB management input 40 / EOC / Battery Evacuaion floor input 38 / 0V_IN / GND input for the photo-coupled inputs 37 / 0V_DD / Auxiliary GND of the drive for the inputs 21 / BUZS / Contact for Acoustic signal For further information please refer to the user manual
3	Power supply connection 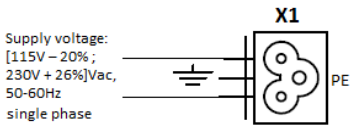 	
4	Final checks	Verify that ALL the signals are connected **and apply the cover**. For further information please refer to the user manual

EN

HMI user interface

EN

The CDD 5.0 door drive has a front panel that allows to activate different functional modes: Normal, Inspection, Configuration

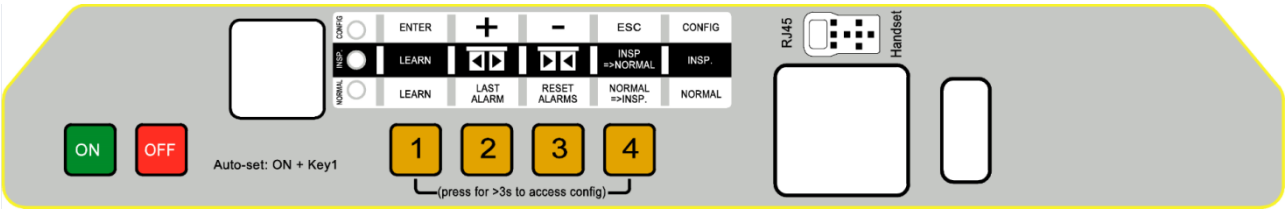

MODE		NORMAL	INSPECTION	CONFIGURATION
Description		Normal mode (automatic): the door drive executes the commands from MLC	Inspection mode (manual): the door drive executes commands from the front panel keys	Configuration mode: parameters Programming
LEDS	NORMAL	**ON**	OFF	OFF
	INSP	OFF	**ON**	OFF
	CONFIG	OFF	OFF	**ON**
KEYS	**1**	Only Key 1 pressed for t>1s: Self-learning activation Key 1 and key 4 pressed together per t>3s: Configuration mode access	Only Key 1 pressed for t>1s: Self-learning activation	**Enter** Access to parameter value OR Parameter value saving and return to parameters list
	2	Pressed and keep pressed (t>3s): Last alarm code showed	Door opening	**+** Increase Parameter index, OR Increase Parameter value
	3	Pressed for t>3s: reset of the last alarm codes Key 2 and key 3 pressed together for t>3s: Speed profiles reset	Door closing	**-** Decrease Parameter index, OR Decrease Parameter value
	4	Acces to Inspection mode (if only key 4 pressed for t<1s) Access to Configuration mode (if Key 1 and key 4 pressed together for t>3s)	Return to Normal mode	**Esc** Exit from parameter selection OR Exit from Configuration mode and return to Normal mode
DISPLAY		Door drive status showed: "- -" , "OP", "CL", "IM", "AL", ..	Door drive status showed: "- -" , "OP", "CL", "IM", "AL", ..	Parameter list: "P" alternate to the parameter index. Parameter modification: parameter value showed
NOTES		This is the default mode at the power on of the door drive. ALL inputs are active	ALL the signal from the MLC are not active	Paramer selection: "P" showed alternate to the parameter index

EN

Door set-up, Learning and functional test

EN

Once the installation phase described in the previous paragraph is completed, it is possible to proceed with the power on of the device and its configuration. In case of problems during the execution of the phases, please refer to the user manual.

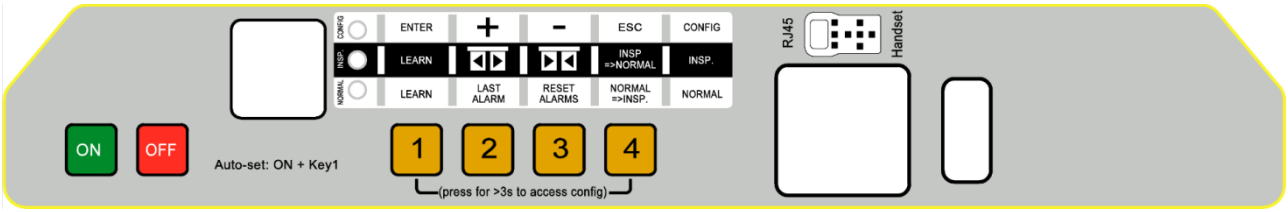

STEP	Operation	Description	Visualisations
1	**Power supply test**	Connect the main power supply. Press ON button on the door drive front panel	"88" followed by "- -"
2	**Door operator Configuration**	Configure the parameters related to the installed mechanical door operator (please refer to chapter 5 of the user manual for details): P05 – Car door locking device (0=not present, 1=present) P22 – Motor Closing rotation (0=clockwise,1=counter-clockwise) P26 – Skate type (0=S20, 1=S90, 2=S120) P52 – Code applied on the lift installation (0 = EN81-1, 1 = EN81-20) P90 – Installed motor type (00=self-recognized) P99 – MLC commands logic (0=H active and RSC forced closing, 1=L active and RSC reduced speed, 2=H active and RSC reduced speed)	-
3	**Self-learning execution**	Enter in the Door Drive Inspection mode, pressing key 4 and checking that INSP led is on. Press and keep pressed key 3 and check the door closing with reduced speed, if not closed. The door completes the panels and skate closing. Release key 3. In case the movement direction is wrong or in case of alarms, proceed with the checks suggested in the user manual. To optimize the execution of the learning procedure, it is suggested to couple car and landing door, executing the operations from the car roof in inspection mode. Press key 1 for at least 1s to enable Self-Learning. Press shortly key 2. The door starts opening with reduced speed until the door is completely opened. The learning phase is completed.	INSP. Led ON "CL" blinking "CL" fixed "SL" fixed "SL" blinking "OP" fixed
4	**Speed Profiles check in Inspection mode**	Press continuously key 3 to execute the door closing with normal speed, until the door is completely closed. Press continuously key 2 to execute the door opening with normal speed, until the door is completely opened. In case it is necessary to tune the speed profiles, please refer to the user manual.	"CL" blinking "CL" fixed "OP" blinking "OP" fixed

EN

5	**Obstacle reversing check in Inspection mode**	Put an obstacle at different points of the door access. Press and keep pressed key 3, to perform a door closing. When the panels meet the obstacle, the door drive will immediately reverse the movement starting the reopening. Release key 3 during the reopening movement and wait until the door is completely opened.	“CL” blinking “IM” blinking “OP” fixed or “- -“ blinking
6	**Functional check in Normal mode**	Complete the door closing, if not performed: press and keep pressed key 3 until the door is completely closed. Release key 3 Activate the NORMAL mode of the controller, from the Inspection mode: press key 4 and check the led NORMAL is on. Now the controller works in Normal mode, and executes the commands received from the MLC, as well as the reversing from detector directly connected to the door controller. Perform all the functional check with the complete system operating in Normal mode, from the car roof or from the landing, according to the procedure active for the involved maintenance people.	“CL” blinking “CL” fixed  led NORMAL ON

Installation Trouble-shooting

The installation sequence previously reported describes all the steps that have to be executed to operate a correct and complete set-up of the door system.

In case of issues, or anomalous behaviors happen during the installation, please refer to the user manual, part related to problems and solutions.

For any alarms, please refer to the user manual, part related to the Alarms.

Conformity Declaration (DDC)

computec

www.computeconline.it

Computec s.r.l
Via C.A. Dalla Chiesa, 5
25017 – Lonato del Garda (BS)

Computec s.r.l. declares under its own responsibility, that the product:

CDD5.0 "Computec Door Drive 5.0"

For lift doors (model CDD5.0, P1993)

is produced according to the following Directives:

- Machines 2006/42/CE
- LVD 2014/35/UE
- Rohs II 2011/65/CE
- EMC 2014/30/UE
- Lifts 2014/33 /UE

And it is compliant to the followings harmonized standards:

- EN 81-20 (2014)
  - EN 12015 (2014)
  - EN 12016 (2013)
  - EN 60204-1 (2018-09)
- EN 81-50 (2014)
- EN 50581 (Rohs II 2012-09)

Where applicable

Lonato Del Garda

Date: 03/04/2019

(Signature)