Computec

Computec
Door Drive 6
(CDD6)

Lift door Controller

USER MANUAL

FW reference version: 01.00.000

EN	CE			PRJ1166_01_07_02_01_01_IUM	rev.07

Index

Index of tables

Introduction

The present user manual contains all the necessary information for a safe and correct installation, configuration, use and maintenance of the lift door controller CDD6.

Before proceeding with the installation of the CDD6, it is necessary and strongly recommended that the installation personnel have read and understood all the parts described in the present manual.


a non-correct installation of the system may cause serious danger and/or injury.

The present user manual is in any case integral part of the CDD6 device, and it must be included to the installation documentation.

All the references to the safety and responsibility are reported in the chapter 8 “General information”.

The present manual contains detailed information related to the firmware version 01.00.000, regarding all descriptions about functional implementation.

NOTE: all the pictures, images, schematics reported in this manual have purely example purpose: the components of the lift system may result different, based on the installed motor and door operator.

Glossary

Symbol	Description	Notes
CDD6	Computec Door Drive 6	
E.C.	Elevator Controller	
MLC	Main Lift Controller	
HMI	Human to Machine Interface	User Interface on the CDD6 front panel
DOC	Door Opening Command	Same as KA, VST-O
DCC	Door Closing Command	Same as KC, VST-S
RSC	Reduced Speed Command	Same as KB, VRVRT
RVC	Reversing Command	Same as KN
FFC	Fire-Fighting Command	Same as KFF
AUXC	Auxiliary Command	Same as KAUX
DTBC	Double TB Command (second door space)	Same as K2TB
EOC	Emergency Opening Command	Same as KEOD
DETC	Detector (barriers, photocell) Command	Same as Det.In.
DOS	Door Opened Signal	Same as LA, KET-O
DCS	Door Closed Signal	Same as LC, KET-S
RVS	Door Reversing Signal	Same as IM, KSKB
AUXS	Auxiliary Signal	Same as AUX
BUZS	Acoustic Signal	Same as BUZZ, PIN21
SL	Door Self-learning active	
Au	Auto-Setup procedure active	
CL	Closing/Closed	
OP	Opening/Opened	
FSET	Reversing force setting	
TH	Door height	
TB	Door width	
DTBC	Second door width command	
AFT	Anti-Finger Trapping device function	
ms	Millisecond	
mA	milliAmpère	
Imp.	Space transducer pulses	
PSO	Parking with Skate Opened	
⚠	Important Note	
S20	Aluminium Skate, 20mm space on the belt	
S90	Iron Skate, 90mm space on the belt	
S120	Iron Skate, 120mm space on the belt	

1 Technical Specifications

1.1 Standards and Codes References

All the references to the standards and Codes are reported in paragraph 8.6 “Standard and codes reference”.

1.2 Door Drive Data

Supply voltage	[100 ; 240]Vac 1-ph 50-60Hz, (115V – 20%, 230V + 30%)	Vac
Available Peak output power	300	VA
Nominal output power	200	VA
Working Temperature	[-10; +60]	°C
Humidity	[20;80] non condensing	%
Electrical protection	[5x20, 4A] rapid fuse on main power supply line [5x20, 8A] fuse on the battery supply line	
Environmental protection	IP-54 case	

- Table 1: door drive data

1.3 Compatible Motors Data

(Code) Motor Type / Transmission / Encoder	Nominal power	Nominal Voltage	Nominal current
DC Motors			
(12) GR 63x25 + SG80K (15:1) + Enc100	50VA	24V	2.7A
(13) GR 63x55 + SG120 (15:1) +Enc100	100VA	24V	4.9A
(20) M63x50 + SN40 (15:1) + IGO100/2	100VA	24V	4.9A
(21) M63x25 + SN31 (15:1) + IGO100/2	100VA	24V	2.7A
(23) M48x60 + SN 22,6 (7:1) + IGO100/2	50VA	24V	2.6A
(01) Moog 1Nm (4:1 belt) + Enc500	100VA	24V	3.6A
(02) Moog 2Nm (4:1 belt) + Enc500	200VA	24V	6.0A
(03) Siboni 65PC132 (4:1 belt) + Enc500	150VA	65V	2.7A
Brushless Motors			
(14) BG 62x60 + SG120 (15:1) + Enc100	130VA	40V	3.9A
(16) BG 62x30 + SG80K (15:1) + Enc100	70VA	40V	2.2A
DC Motors for Magnet switches applications			
(05) DC 1Nm comp. F28/LMDC2010	-	-	3.6A
(06) DC 2Nm comp. F29/LMDC2011	-	-	6.0A
(07) DC 1Nm comp. Digidoor 1Nm	-	-	3.6A
(08) DC 2Nm comp. Digidoor 2Nm	-	-	6.0A

- Table 2: compatible motors data -

1.4 System mechanical data

Motor type	Moving mass limit	Maximum Parking force available during parking with door opened	Maximum force available during closing movement
DC Motors			
(12) GR 63x25 + SG80K (15:1) + Enc100	180kg	70N	250N
(13) GR 63x55 + SG120 (15:1) +Enc100	300kg	90N	270N
(20) M63x50 + SN40 (15:1) + IGO100/2	300kg	85N	280N
(21) M63x25 + SN31 (15:1) + IGO100/2	180kg	70N	240N
(01) Moog 1Nm (4:1 belt) + Enc500	180kg	150N	290N
(02) Moog 2Nm (4:1 belt) + Enc500	300kg	150N	290N
(03) Siboni 65PC132 (4:1 belt) + Enc500	180kg	150N	290N
Brushless Motors			
(14) BG 62x60 + SG120 (15:1) + Enc100	200kg	80N	280N
(16) BG 62x30 + SG80K (15:1) + Enc100	300kg	100N	350N
DC Motors for Magnet switches applications			
(05) DC 1Nm comp. F28/LMDC2010	-	-	-
(06) DC 2Nm comp. F29/LMDC2011	-	-	-
(07) DC 1Nm comp. Digidoor 1Nm	-	-	-
(08) DC 2Nm comp. Digidoor 2Nm	-	-	-

- Table 3: system limits -

2 Generalities

2.1 Intended use

The CDD6 (Computec Door Drive 6) device is an electronic system that permits to operate all the lift doors operated by the motors described in the table "- Table 2: compatible motors data".

The CDD6 controls the lift door opening and closing automatically, according to the commands received from the main lift controller of the lift system, and controls the time intervals, currents, speed profiles, different external devices directly pluggable to the drive, and the possible anomalous behaviour as over-voltages, connections interruptions, and so on.

2.2 System overview

The CDD6 system is a part of the complete lift door operator, consisting in:

- Mechanical door operator:
  - Header
  - Carriages
  - Belt
  - Motor
- Door Drive (the CDD6)
- Contacts Interface to the main lift controller

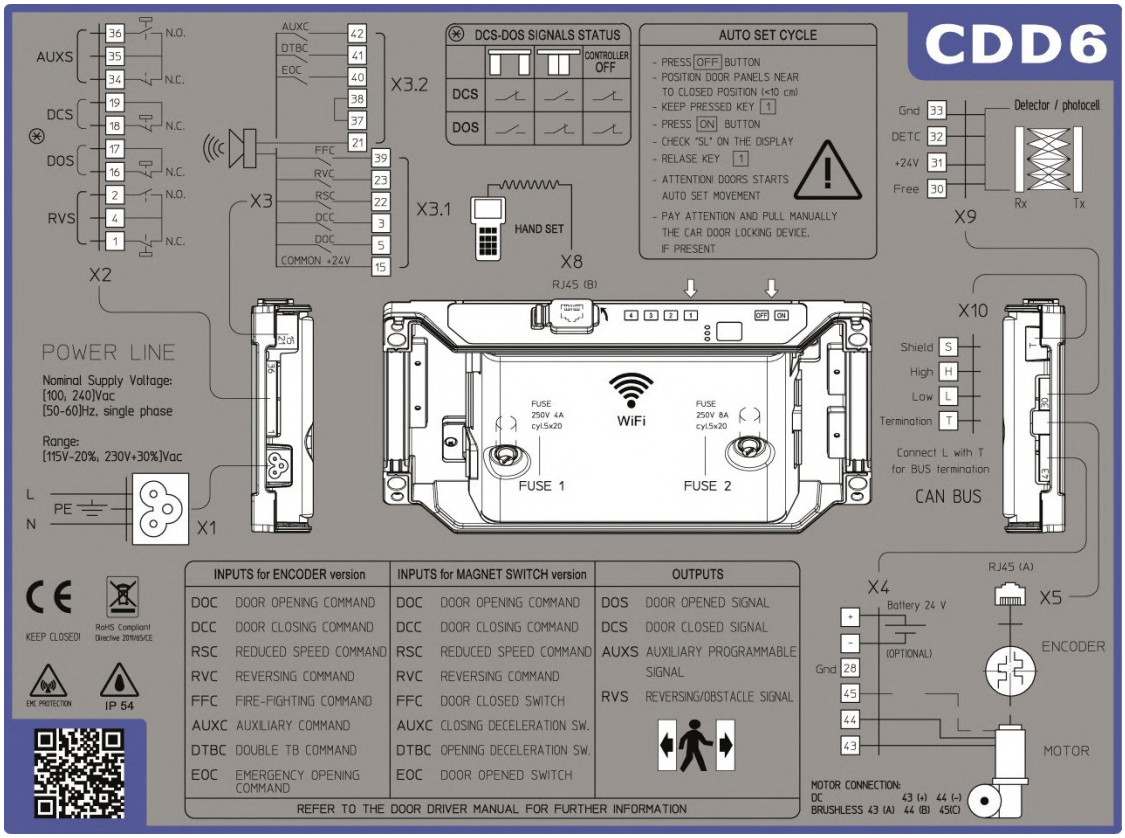

- Figure 2-1: connection diagram of the CDD6

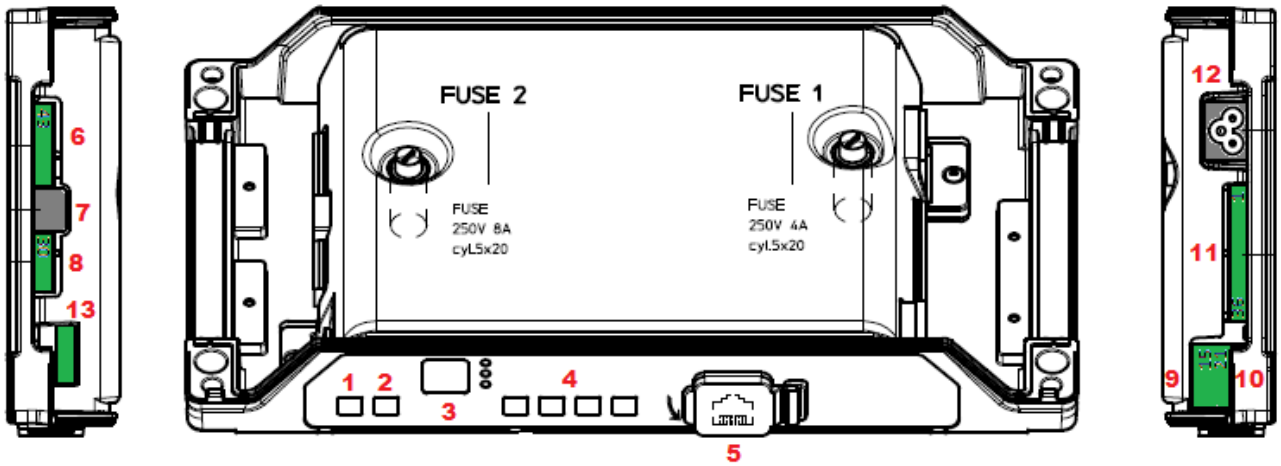

- Figure 2-2: identification of keys and connections

The controller is equipped with:

N°	ID	Description
1	ON	Power on key
2	OFF	Power off key
3	Display	7-segment display (two digits) to show status/configuration
4	“1” “2” “3” “4”	Functional keys for visualization/movement/programming
5	X8	Plug for upgrade/configuration external device
6	X4	Plug for motor/battery
7	X5	RJ45 plug for motor encoder
8	X9	Direct connection of optical light curtains (including power)
9	X3.1	Plug for Elevator controller commands
10	X3.2	Plug for local inputs of the door operator
11	X2	Plug for drive output to the elevator controller
12	X1	Plug for main power supply
13	X10	CAN bus connector

- Table 4: list of connections/keys

2.3 Compatibility for applications and motors

The CDD6 can be applied to all the lift door operators that use the motors reported in the compatibility table, in particular for that operator for which it is pre-set the configuration of the mechanical transmission (skate, motor pulley, …).

It is possible in any case to adapt the system configuration to other door operator that uses the same motors, setting manually the specified parameters values. It is strongly suggested, in this case, to previously contact directly Computec technical support, for information about compatibility and configuration.

3 Installation

Before proceeding to the installation, verify the necessary safety devices:

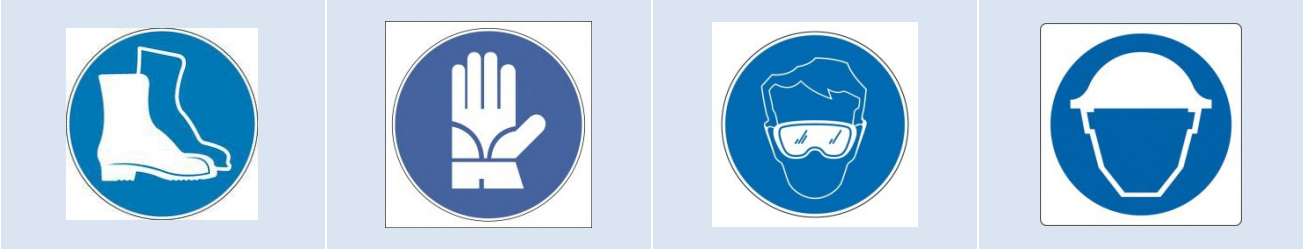

In addition, verify the necessary instruments to perform all the operations:

Be sure to work in full safe conditions, setting the inspection mode on the lift before starting any operation.

3.1 Preliminary mechanical checks

The installation of the door drive has to be performed by expert technical personnel, having all the professional requirements expected, based on the active law in the installation country.

Before proceeding with the installation of the door drive it is necessary to:

- Check the correct and good status of the door operator installation:
  - Correct installation of the door panels
  - Correct installation of the carriages
  - Correct installation of the transmission (belt connection, belt)
  - Correct installation of the gear-motors, according to table “- Table 2: compatible motors data”
- Check that the panels movement is free, without obstacles overall the complete door space.
- Check the material of the box:
  - CDD6 door controller
  - Retrofit fixation bracket to be fixed on the controller, in case of retrofit

3.2 Mechanical Installation

The mechanical installation of the door drive has to be executed according to the controller type to replace. For this reason, the CDD6 is supplied with the retrofit fixation bracket. The following table shows the two fixation possibilities.

Fixation type	Description
Installation with retrofit bracket 1. Switch off the main power supply 2. Remove all the connection from the old door controller 3. Remove the door controller to be replaced 4. Remove the cover of the CDD6. Apply the retrofit bracket to the CDD6 5. Install the door controller, using the fixation holes aligned to the holes present on the operator. 6. Apply the previous fixation screws	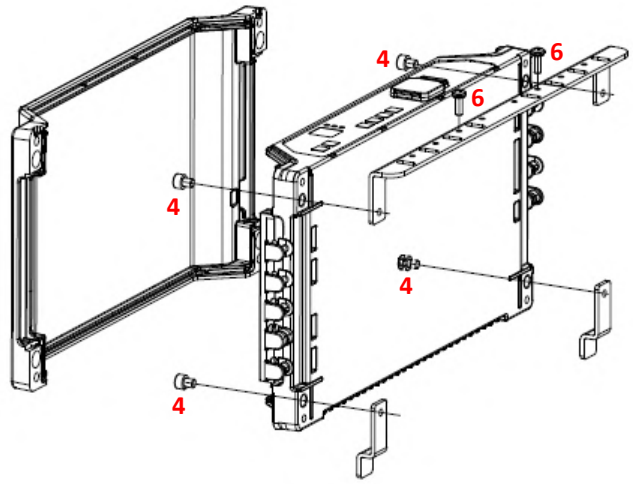
Installation on direct compatible systems 1. Switch off the main power supply 2. Remove all the connection from the old door controller 3. Remove the door controller to be replaced 4. Remove the cover of the CDD6 5. Apply the door drive using the four fixation points present on the operator.	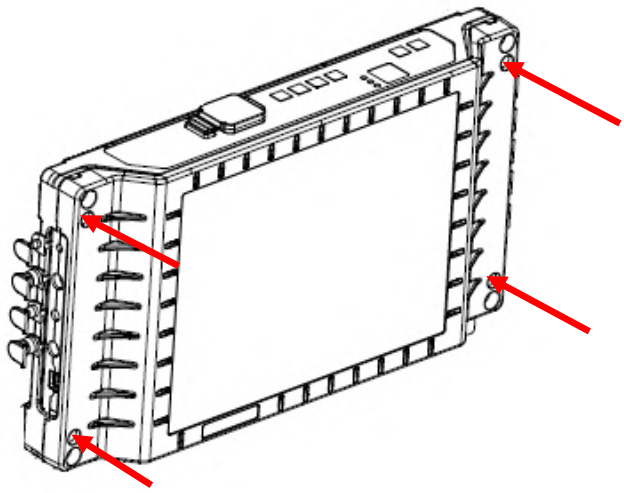

- Table 5: mechanical installation of the drive –

3.3 Preliminary electrical checks

Verify the presence of the correct supply voltage, as reported in the table “- Table 1: door drive data”.

Once the mechanical installation of the CDD6 drive is completed, and the CDD6 is fixated to its holding (with retrofit bracket or directly), proceed as reported below.

3.4 Check of electrical parts

<table>
<tr><th>Step</th><th>Operation</th><th>Description</th></tr>
<tr><td>0</td><td>Preliminary checks</td><td>Press OFF button on the door drive front panel.
Be sure that no power supply is present.</td></tr>
<tr><td>1</td><td>Motor Connections
 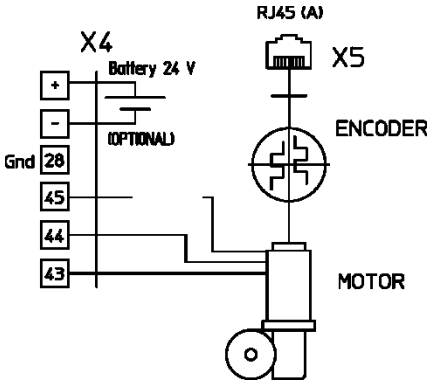
</td><td>1.Connect the motor cable to the pins of the X4 connector:

<table>
<tr><th>PIN</th><th>Description</th><th>Wire Color</th></tr>
<tr><td>43</td><td>Positive (phase A for brushless)</td><td>Brown (1 for brushless)</td></tr>
<tr><td>44</td><td>Negative (phase B for brushless)</td><td>White (2 for brushless)</td></tr>
<tr><td>45</td><td>(phase C for brushless)</td><td>(3 for brushless)</td></tr>
</table>
Keep in any case the previous connection order, in case no numbering rings are present, or in case the wires color is different from the one described.

2.If present, connect the encoder cable with its RJ45 male to the X5 connector.

3.If present, connect the external battery kit to the positive (+) and negative (-) pins of the X4 connector.</td></tr>
<tr><td>2</td><td>MLC interface connection
 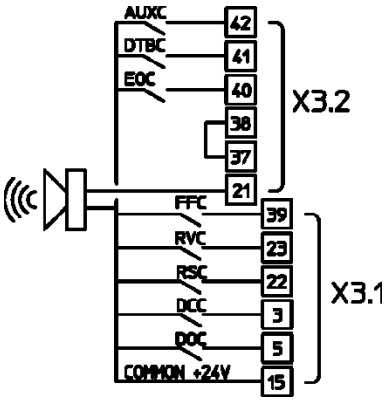

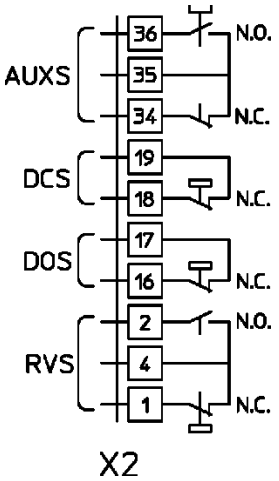
</td><td>In case of replacement of different controllers with different plugs proceed as following reported, otherwise plug the previous connectors as they are.

Check the common voltage used, and the used contacts:
<table>
<tr><th>Common</th><th>Connections</th></tr>
<tr><td>Internal 24V_DD (CDD6)</td><td>Check the presence of the 37-38 bridge as GND reference</td></tr>
<tr><td>External 24V_EC (MLC)</td><td>Remove the 37-38 bridge, only in case there are no local contact installed on the car roof</td></tr>
</table>
For further information please refer to the paragraph 4.2.1

Connection of the MLC commands and of the local contacts:
<table>
<tr><th>PIN</th><th>Name</th><th>X3.1 Pin Description</th></tr>
<tr><td>15</td><td>24V</td><td>Common 24V, available for MLC commands</td></tr>
<tr><td>5</td><td>DOC</td><td>Opening command</td></tr>
<tr><td>3</td><td>DCC</td><td>Closing command</td></tr>
<tr><td>22</td><td>RSC</td><td>Reduced speed command</td></tr>
<tr><td>23</td><td>RVC</td><td>Reversing command from detector</td></tr>
<tr><td>39</td><td>FFC</td><td>Fire-Fighting mode enable input</td></tr>
<tr><th>PIN</th><th>Name</th><th>X3.2 Pin Description</th></tr>
<tr><td>42</td><td>AUXC</td><td>Programmable Auxiliary input</td></tr>
<tr><td>41</td><td>DTBC</td><td>Second TB management input</td></tr>
<tr><td>40</td><td>EOC</td><td>Battery Evacuation floor input</td></tr>
<tr><td>38</td><td>0V_IN</td><td>GND input for the photo-coupled inputs</td></tr>
<tr><td>37</td><td>0V_DD</td><td>Auxiliary GND of the door drive for the inputs</td></tr>
<tr><td>21</td><td>BUZS</td><td>Contact for Acoustic signal</td></tr>
</table>
For further information please refer to the paragraph 4.2.1</td></tr>
</table>

3	Power supply connection 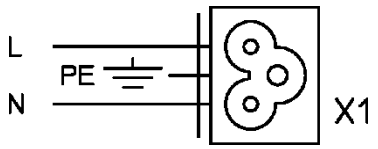 	Nominal Supply Voltage: [100 – 240]Vac [50-60]Hz, single phase Range: [115-20%, 230+30%]Vac
4	Final Checks	Verify that required signals are connected, **then apply the cover**. For further information please refer to the paragraph 4.2

- Table 6: installation of electrical parts (Encoder version)–

3.5 Check of electrical parts for magnetic switches applications

Step	Operation	Description
0	Preliminary checks	Press OFF button on the door drive front panel. Be sure that no power supply is present.
1	Motor Connections 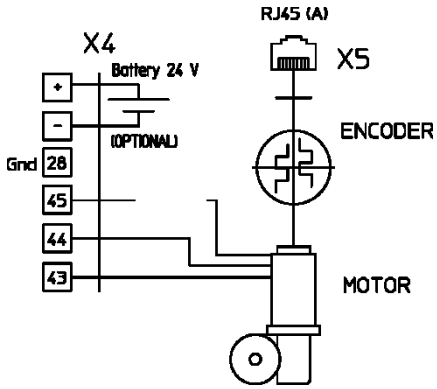 	1.Connect the motor cable to the pins of the X4 connector: PIN / Description / Wire Color 43 / Positive / Brown 44 / Negative / White Keep in any case the previous connection order, in case no numbering rings are present, or in case the wires color is different from the one described. 2.If present, connect the external battery kit to the positive (+) and negative (-) pins of the X4 connector.

2

MLC interface connection

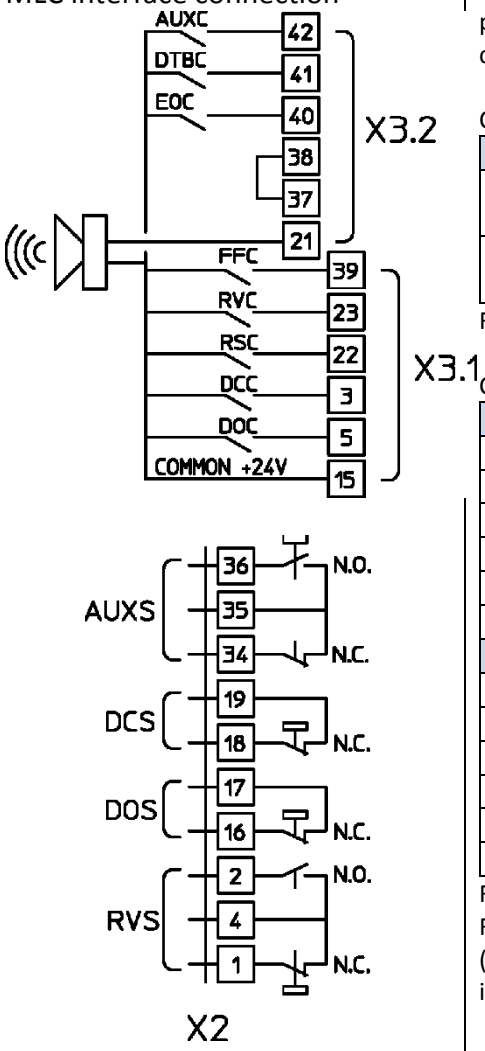

In case of replacement of different controllers with different plugs proceed as following reported, otherwise plug the previous connectors as they are.

Check the common voltage used, and the used contacts:

Common	Connections
Internal 24V_DD (CDD6)	Check the presence of the 37-38 bridge as GND reference
External 24V_EC (MLC)	Remove the 37-38 bridge, only in case there are no local contact installed on the car roof

For further information please refer to the paragraph 4.2.1

Connection of the MLC commands and of the local contacts:

PIN	Name	X3.1 Pin Description
15	24V	Common 24V, available for MLC commands
5	DOC	Opening command
3	DCC	Closing command
22	RSC	Reduced speed command
23	RVC	Reversing command from detector
39	LC (FFC)	Door closed limit switch
PIN	**Name**	**X3.2 Pin Description**
42	RC (AUXC)	Closing deceleration limit switch
41	RA (DTBC)	Opening deceleration limit switch
40	LA (EOC)	Door open limit switch
38	0V_IN	GND input for the photo-coupled inputs
37	0V_DD	Auxiliary GND of the door drive for the inputs
21	BUZS	Contact for Acoustic signal

For further information please refer to the paragraph 4.2.1
For any further information about magnetic switches application (electrical connection, …) please refer to the related special instruction

3

Power supply connection

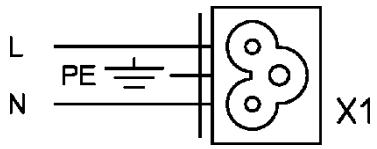

Nominal Supply Voltage: [100 – 240]Vac [50-60]Hz, single phase
Range: [115-20%, 230+30%]Vac

4

Final Checks

Verify that required signals are connected, **then apply the cover**.
For further information please refer to the paragraph 4.2

- Table 7: installation of electrical parts (Magnet switch version)–

3.6 Door set-up, Learning and Functional tests

Once the physical installation phase described in the previous paragraph is completed, it is possible to proceed with the power ON of the device and its configuration. In case of problems during the execution of the phases, please refer to the paragraph 6.2. Refer to paragraph 4.3.2 for the front panel use.

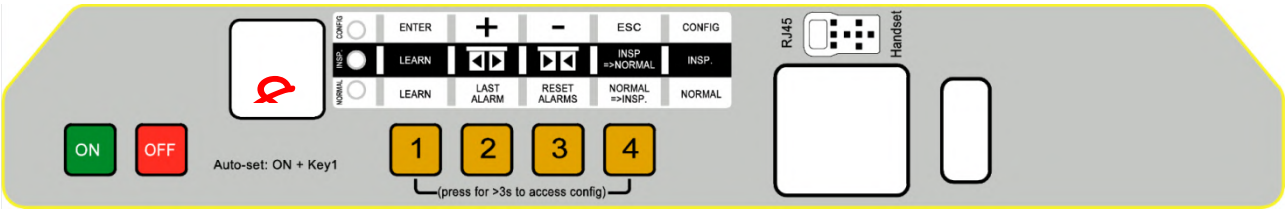

STEP	Operation	Description	Notes
1	**Power supply test**	Connect the main power supply. Press ON key and checks the front panel display as indicated. Then press OFF key.	“88” followed by “- -“
2	**AUTOSET execution**	Put the door panels near to the panels closed position (gap<10cm), then press and **keep pressed key** 1 on the door drive front panel. Press ON key, checking that “SL” is shown on the door drive display, **then release key** 1. **Floor with DTBC contact active (not available for magnetic switches application)**: AUTOSET for second TB floor will start automatically. The door starts the auto-set procedure auto-detecting: - the closing rotation - the skate space - the door movement space - the door closing torque profile to optimize the closing force detection - the opening profile. In case the of errors or alarms, proceed with the checks suggested in the user manual. To optimize the execution of the learning procedure, it is suggested but not necessary to couple car and landing door, executing the operations from the car roof in inspection mode. The learning phase is completed.	CONFIG INSP. NORMAL NORMAL, INSP. and CONFIG LEDS are all ON “SL” fixed Auto-set for DTBC contact: “S2” fixed In case or error: “Er” alternate to the error code In case of alarm “AL” alternate to the alarm code “OP” fixed

<table>
<tr>
<td>3</td>
<td>Door operator configuration (check & set)</td>
<td>Check and Configure the parameters related to the installed door operator (please refer to paragraph 5.1):
<table>
<tr><td>P05</td><td>SET</td><td>Car door locking device:
0 = not present,
1 = present</td></tr>
<tr><td>P22</td><td>CHECK</td><td>Motor Closing rotation:
0 = clockwise
1 = counter-clockwise</td></tr>
<tr><td>P28</td><td>CHECK</td><td>Skate type:
02 = S20
09 = S90
12 = S120</td></tr>
<tr><td>P90</td><td>CHECK</td><td>Installed motor type:
00 = self-recognized
XX = manual selected motor type</td></tr>
<tr><td>P91</td><td>CHECK</td><td>Self-recognized motor type:
00 = autoset procedure requested!?
XX = recognized motor type</td></tr>
<tr><td>P99</td><td>SET</td><td>MLC commands logic
0 = H active and RSC forced closing
1 = L active and RSC reduced speed
2 = H active and RSC reduced speed
3 = L active and RSC forced closing
4 = CAN BUS</td></tr>
</table>
</td>
<td>Refer to paragraph 4.3.2 for the information about access to Configuration Mode.</td>
</tr>
<tr>
<td>4</td>
<td>Inspection mode</td>
<td>Put CDD6 in inspection mode by pressing key 4 and check the INSP. LED is ON.</td>
<td> 

INSP. LED is ON</td>
</tr>
<tr>
<td>5</td>
<td>Speed Profiles check in Inspection mode</td>
<td>Press continuously key 3 to execute the door closing with normal speed, until the door is completely closed.

Press continuously key 2 to execute the door opening with normal speed, until the door is completely opened.

In case it is necessary to tune the speed profiles, please refer to the paragraph 5.2.1</td>
<td>Display visualization:

“CL” blinking
“CL” fixed

“OP” blinking
“OP” fixed</td>
</tr>
</table>

6	**Obstacle reversing check in Inspection mode**	Put an obstacle at different points of the door access. Press and keep pressed key 3 to perform a door closing. When the panels meet the obstacle, the door drive will immediately reverse the movement starting the reopening. Release key 3 during the reopening movement and wait until the door is completely opened. In case it is necessary to configure reversing system, please refer to the paragraph 5.2.1	Display visualization: “CL” blinking “IM” blinking “OP” fixed or “- -“ blinking
7	**Detector check in Inspection mode**	Execute this step only if external optical detector, light curtains or photocell are directly connected to the CDD6, to the RVC input or to the X9 plug. During the door closing, interrupt the light curtains and check the immediate reopening of the door, until the door is completely open. Remove any obstacle from the detector activation zone, and check the door closing until the door is completely closed. In case it is necessary to configure reversing system, please refer to the paragraph 5.2.1. In case it is necessary to configure input reversing, please refer to the paragraph 5.2.15.1, 5.5.2, 5.5.3	Display visualization: INSP. LED is ON “CL” blinking “IM” blinking. “IM” fixed. “CL” blinking “CL” fixed

8	**Functional check in Normal mode**	Complete the door closing, if not performed: press and keep pressed key 3 until the door is completely closed. Release key 3. Check the closing force limit for reversing, with appropriate instrumentation. Activate the NORMAL mode of the controller, from the Inspection mode: press key 4 and check the LED NORMAL is ON. Now the controller works in Normal mode, and executes the commands received from the MLC, as well as the reversing from detector directly connected to the door controller. Perform all the functional checks with the complete system operating in Normal mode, from the car roof or from the landing, according to the procedure active for the involved maintenance people.	Display visualization: NORMAL LED ON

- Table 8: configuration, learning and test sequence –

3.7 Installation trouble-shooting

The installation sequence previously reported describes all the steps that have to be executed to operate a correct and complete set-up of the door system.

In case of issues, or if anomalous behaviours happen during the installation, please refer to the paragraph 6.2 “Troubleshooting (FAQ)”. For any alarms, please refer to the paragraph 6.1 “Alarms”.

4 Functionalities

The present chapter describes in details the structure and the functionalities of the CDD6 door drive.

4.1 System

The CDD6 lift door drive is a part of the lift door operator. Refer to the paragraph 2.2 for the description of the different parts of the system. Refer to the paragraph 1.3 for the details about the compatible motors that can be controlled by the CDD6.

Following it is reported the connection diagram of the device:

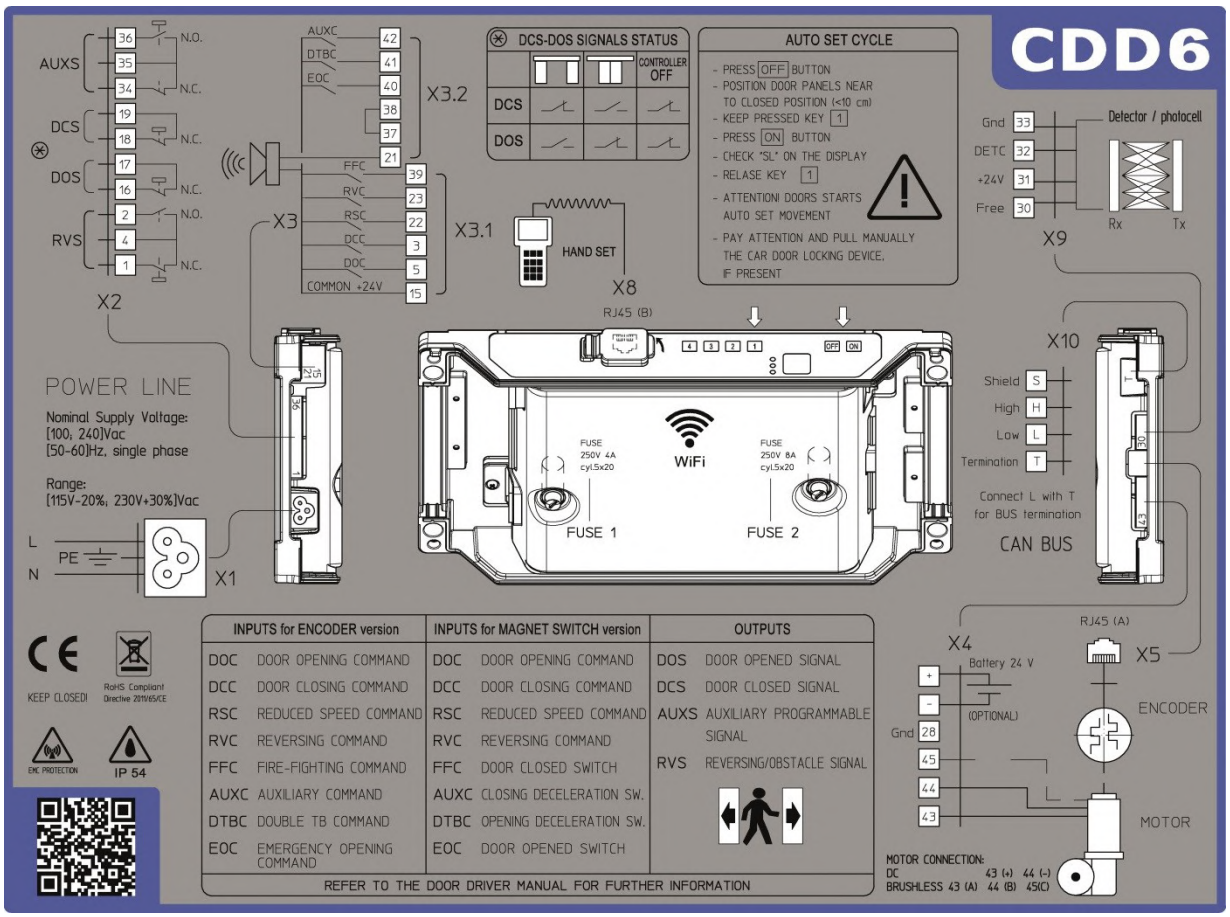

- Figure 4-1: connection diagram of the CDD6 -

The connection details for every available plugs are reported below:

Terminal N°	Connection mode	Connection type	Conductor type	Temperature range	Fixation torque	AWG UL/CL section
X4	Screw	Load (motor output power)	Use only copper conductor	60°C (140°F)	Min 0.5 Nm Max 0.6 Nm	Min 20 Max 18
X5	Plug	Motor Encoder	Use only copper conductor	Not required	Not required	Not required
X9	Screw	Optical Detector	Use only copper conductor	Not required	Min 0.5 Nm Max 0.6 Nm	Min 30 Max 12
X3.1	Screw	MLC commands	Use only copper conductor	Not required	Min 0.5 Nm Max 0.6 Nm	Min 30 Max 14
X3.2	Screw			Not required		Min 30 Max 12

X2	Screw	Outputs to MLC	Use only copper conductor	Not required	Min 0.5 Nm Max 0.6 Nm	Min 30 Max 12
X1	Insertion	Main power supply	Flexible cable according to UL ZJCZ category.	60°C (140°F)	Not required	Min 18 Max 12
X8	Insertion	Handset/ Upgrade key	-	Not required	-	-
X10	Screw	CAN bus	Use only copper conductor	Not required	Min 0.5 Nm Max 0.6 Nm	Min 30 Max 12

- Table 9: connections characteristics -

The following table reports all the INPUTS available on the controller:

Signal	Position	Description	Contact type	Default status	Notes
DOC	X3.1.5	Door Opening Command (from MLC)	Dry contact	Open	
DCC	X3.1.3	Door Closing Command (from MLC)	Dry contact	Open	
RSC	X3.1.22	Forced reduced speed closing command or Reduced speed enable command (from MLC)	Dry contact	Open	The MLC may activate this command when the light curtains (connected to MLC) are deactivated from the MLC, after a timeout or maximum closing retries
RVC	X3.1.23	Reversing external source	Dry contact	Open	
FFC	X3.2.39	Fire-Fighting mode enable command (from MLC)	Dry contact	Open	
DTBC	X3.2.41	Second TB floor input command	Dry contact	Open	This contact is installed on the floor with a different opening space. **It is necessary to execute a second door learning during installation phase**
AUXC	X3.2.42	Auxiliary contact (programmable)	Dry contact	Open	
EOC	X3.2.40	Evacuation floor contact	Dry contact	Open	This contact is installed at the evacuation floor to permit the automatic opening cycle with drive powered by batteries

- Table 10: inputs types -

The following table reports all the OUTPUTS available on the controller:

Signal	Position	Description	Contact type	Default status	Notes
DOS	X2.16 X2.17	Door Opened signal (to MLC)	Dry contact	Closed	Contact open when the door is completely opened. Ratings: 3A 250Vac 30Vdc
DCS	X2.18 X2.19	Door Closed Signal (to MLC)	Dry contact	Closed	Contact open when the door is completely closed. Ratings: 3A 250Vac 30Vdc
RVS	X2.1 X2.2 X2.4	Reversing source active or reversing movement active (to MLC)	Dry contact	Double contact	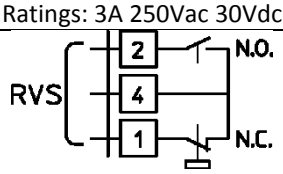 This contact switches, (closing the N.O. contact on

					the common voltage or opening the N.C. contact), when and obstacle is present (from internal closing force limiter or from external sources) Ratings: 3A 250Vac 30Vdc
AUXS	X2.34 X2.35 X2.36	Auxiliary signal (to MLC)	Dry contact	Double contact	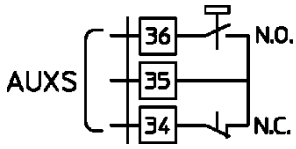 Programmable functions Ratings: 3A 250Vac 30Vdc
Acoustic signal	X3.2.21	Acoustic signal	Open collector 100mA	Open	Activates the acoustic signal in different condition, based on the settings of different parameters

- Table 11: outputs types –

4.1.1 Working Modes

The CDD6 door drive can activate the following working modes:

MODE	DESCRIPTION
NORMAL	This is the normal automatic working mode. The door drive after the power ON enters in this working mode. In this working mode the controller executes the movements requested from the commands sent by the MLC.
INSPECTION	This is the Inspection mode of the door drive. In this working mode the door drive does not accept commands from MLC, but executes the opening/closing movements, according to the pressure of “<>” (key 2) and “><” (key 3) buttons on the door drive front panel.
CONFIGURATION	This is the programming mode, where it is possible to configure and set all the parameters accessible front the door drive front panel.
DIAGNOSTIC	The controller enters in this working mode, when a recognized device is connected to the X8 plug. The door drive recognizes the connection of the external device and, from any of the previous working mode, enters in this one. In this working mode, the controller communicates with the external device for all the diagnostic/configuration/monitor/upgrade operations. When the external device is disconnected, the controller returns automatically in Normal mode.
UPGRADE	This is the mode in which the controller enters during the firmware upgrade.

- Table 12: door drive working modes -

Please refer to paragraph 4.3 “HMI: front panel user interface” about the use of the door drive front panel, and how to move from one to another working mode.

4.2 Connections

4.2.1 MLC signals connection

The present paragraph reports the connections between door drive and MLC, focusing the attention on the connection for the common voltage to use, in case it is the common voltage from CDD (24_DD) or from MLC (24_EC).

Common voltage from CDD has maximum load limit current of 1A.

Common Voltage	Connection	Notes
Internal 24V_DD	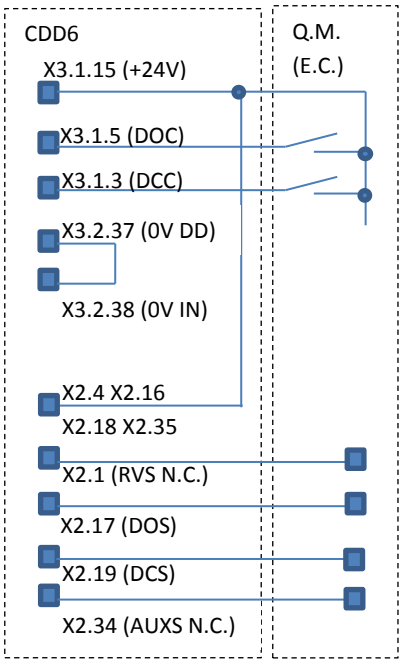	The 37-38 bridge must be present. The MLC uses the 24Vdc from the door drive as common voltage for commands and door drive outputs. Commands: DOC, DCC, RSC, FFC. As example only the first two are reported in the diagram: the others follow the same connection rules. The door drive outputs, being dry contacts, can be connected to another common voltage, if requested by the MLC. The door drive outputs have a dedicated common voltage available for each output. In the diagram they have been grouped in a single pin, that represents a series of bridges between X2.4, X2.16, X2.18, X2.35
External 24V_EC	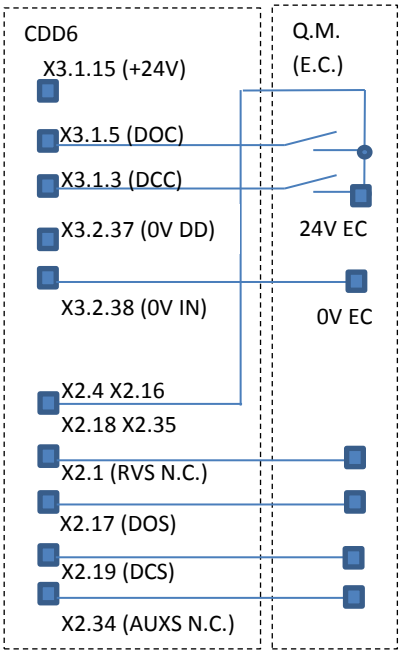	Remove the 37-38 bridge and connect the external 0V from MLC to the 38 pin. Commands: DOC, DCC, RSC, FFC. As example only the first two are reported in the diagram: the others follows the same connection rules. If local wired contacts are present: 1. use the same common voltage active for the commands. 2. use the auxiliary 24Vdc of the door drive, recovering the 37-38 bridges. In this case check the compatibility between 0V_DD and 0V_EC. The door drive outputs keep the same common voltage from MLC, used for the commands. The door drive outputs have a dedicated common voltage available for each output. In the diagram they have been grouped in a single pin, that represents a series of bridges between X2.4, X2.16, X2.18, X2.35

- Table 13: I/O signals connections vs MLC -

4.2.2 Direct connection of optical detector to the CDD6

The present paragraph illustrates the connection of the external reversing sources (detector, light curtains, photocells) directly to the door drive, both as dry contacts or as devices that need also supply voltage.

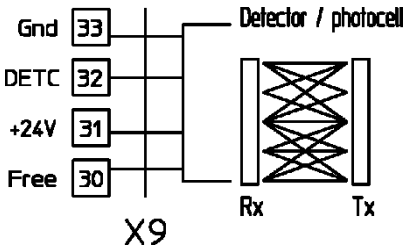

The X9 plug permits to directly connect a PNP device (N.O. or N.C.) to the CDD6: the door drive gives the supply voltage for the device, as reported in the following table:

PIN	DESCRIPTION	NOTES
33	GND	0V pin
32	DETC (IN)	Input pin: connect the status pin of the PNP N.O. or N.C. detector
31	+24Vdc	Voltage supply pin: 24Vdc, 100mA max
30	Free	Free pin: it may be used to fix the connection between RX and TX parts of the detector

- Table 14: direct connection of the optical detector -

NOTE: if it is necessary to connect a detector with N.C. output, reverse the input signal polarity by the parameter described in the paragraph 5.5.23 “P-21: RVC input logic settings”.

NOTE: if it is necessary to connect NPN detector, please contact Technical support per the dedicated instructions.

4.2.3 Connection of input signals from optional local contacts

The present paragraph describes how to connect to the door drive the signals from the special local contacts: EOC, DTBC AUXC.

In this case a magnetic switch is normally installed on the door operator (car side), while on the floor side it is installed a support plate with two magnets that permits the commutations of the magnetic switch, that will be active only when the car is between the two magnets (car at the floor).

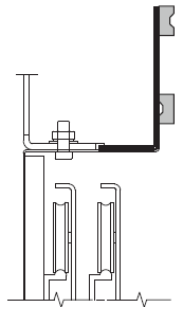

The magnetic switch should be then connected to the desired pin of the door drive. Refer to the paragraphs related to the different functions, for the specific descriptions.

4.3 HMI: front panel user interface

The CDD6 door drive has a front panel that permits to activate different working modes: Normal, Inspection and Configuration.

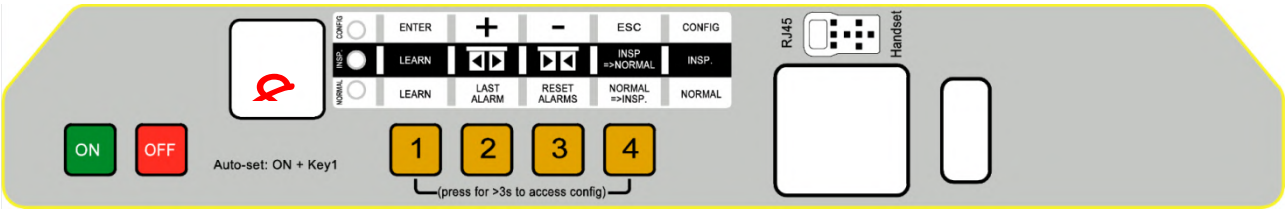

- Figure 4-2: front panel of the CDD6 door drive -

4.3.1 Display

The display (7-segment, two digits) present on the front panel permits the direct visualization of the drive status and the current configurations, based on the active working mode. The following table reports the main possible visualizations:

Digits	Description
op	Blinking: OPENING in progress Fixed: Door OPENED
CL	Blinking: CLOSING in progress Fixed: Door CLOSED
SL	The controller auto-set procedure is in progress
S2	The controller auto-set procedure is in progress (second TB, DTBC command is active)
Er	During the auto-set procedure when an error occurred, the procedure has been interrupted and it must be restarted. Alternate to the error code
AL	Alarm active, alternate to the alarm code.
FC	Blinking: forced closing with reduced speed is in progress
IN	Blinking: reversing movement in progress Fixed: an external reversing source is active, with door opened.
bL	Stop active: DOC and DCC are both present

nt	No torque: motor does not apply torque to the door panels. It is possible to move door panels manually by hands
uF	WiFi mode: it is possible to open and close door panels by “CDD6 APP”
UG	Upgrade of the Firmware Release in progress
Hs	Hand Set is plugged to X8 connector
Sb	Stand by: mains power is not present and the CDD6 has residual charge
88	During power ON to check all display segments
	If NORMAL LED is ON the CDD6 is in OFF state. Press Key ON to switch ON CDD6
- -	This means all the following: - the door drive is waiting for a command - the door panels are at intermediate position (not opened and not closed) - the door drive is not receiving any command from the elevator controller

- Table 15: mean visualizations on the front panel display -

4.3.2 HMI user interface description

The CDD6 door drive has a front panel that allows to activate different functional modes: Normal, Inspection, Configuration.

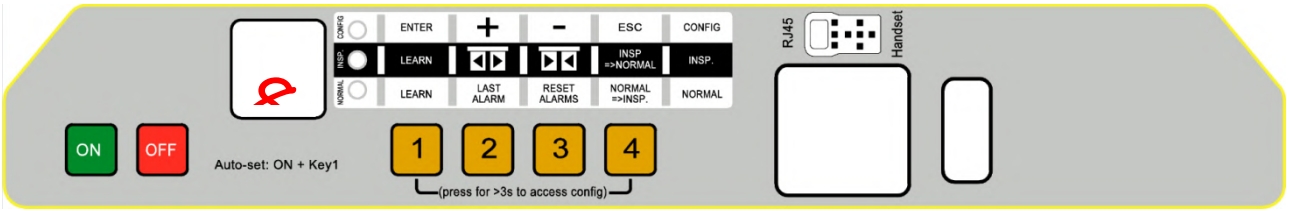

MODE		NORMAL	INSPECTION	CONFIGURATION
Description		Normal mode (automatic): the door drive executes the commands from MLC	Inspection mode (manual): the door drive executes commands from the front panel keys	Configuration mode: parameters Programming
LEDS	NORMAL	**ON**	OFF	OFF
	INSP	OFF	**ON**	OFF
	CONFIG	OFF	OFF	**ON**
KEYS	**1**	Key 1 and key 4 pressed together per t>3s: Configuration mode access		**ENTER** Access to parameter value OR Parameter value saving and return to parameters list
	2	Pressed and keep pressed (t>3s): Last alarm code showed (“no AL” if no alarm present)	Door opening Pressed and keep pressed (t>5s) together key 3: enable or disable Motor torque	**+** Increase Parameter index, OR Increase Parameter value
	3	Pressed for t>3s when last alarm is showed: reset of the last alarm codes (“no AL”)	Door closing Pressed and keep pressed (t>5s) together key 2: enable or disable Motor torque	**-** Decrease Parameter index, OR Decrease Parameter value
	4	Access to Inspection mode (if only key 4 pressed for t>1s) Access to Configuration mode (if key 1 and key 4 pressed together for t>3s)	Return to Normal mode	**ESC** Exit from parameter selection OR Exit from Configuration mode and return to Normal mode
DISPLAY		Door drive status showed: “- -“, “OP”, “CL”, “IM”, “AL”, ..	Door drive status showed: “- -“, “OP”, “CL”, “IM”, “AL”, ..	Parameter list: “P” alternate to the parameter index. Parameter modification: parameter value showed
NOTES		This is the default mode at the power ON of the door drive. ALL inputs are active	DOC and DCC signals from the MLC are not active	Parameter selection: “P” showed alternate to the parameter index

- Table 16: functional table of the CDD6 front panel -

4.4 External handset user interface

The CDD6 door drive can be connected with some of diagnostic and configuration tools, currently available on the market.

4.4.1 Functional description and keys usage

In this paragraph the keys functions are reported, for a proper use of the diagnostic/configuration tool.

- Figure 4-3: Diagnostic/Programming tool example (Computec Handset) –

KEY	DESCRIPTION
	The F1 F2 and F3 keys have different function, based on the current "menu". In any case the key function is reported on the display above each key.
	In the selection list menu, scroll the list from bottom to top.
	In the selection list menu, scroll the list from top to bottom.
	In the parameter change menu, permits to increase or decrease the parameter value.
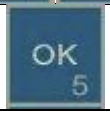	In the list menu, access to the selected (highlighted) voice. In the selection menus, access to the parameter to change and to save the set value.

- Table 17: functional table of the external diagnostic tool -

4.4.2 Handset menu-tree

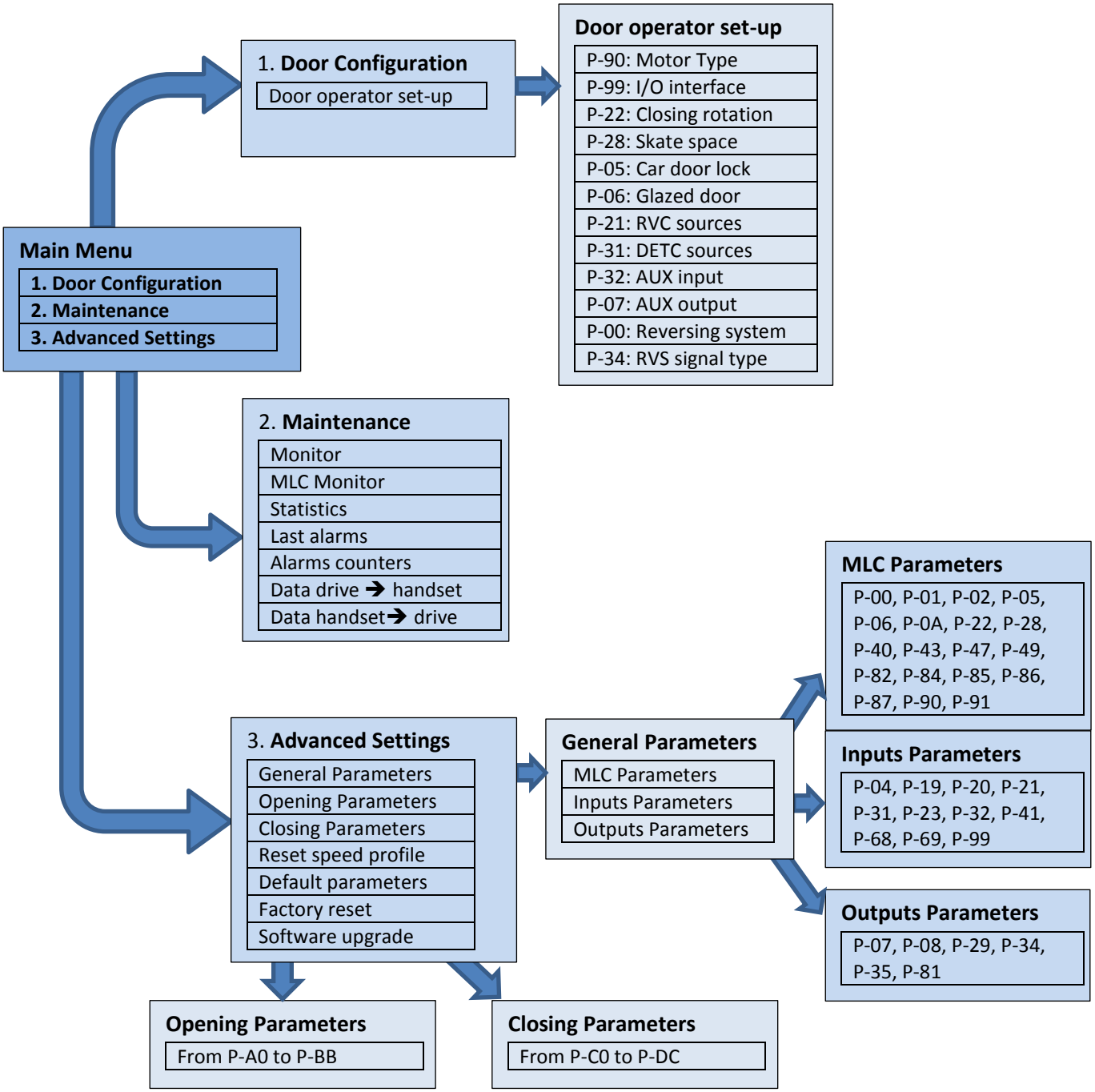

(*): available only for manufacturer

4.5 Door Learning function

The door learning function is the basic fundamental operation to be performed, to obtain a correct behaviour of the system. The CDD6 controller can perform:

1. Automatic learning
   - This procedure permits to learn automatically: the installed motor, the closing rotation, the exact skate space measured on the belt (the skate type too), the door space, the closing and opening torque profile at the normal speed profile. Please remember (before starting the learning procedure or after its completion), to set all the other parameters that identify the door operator (P-05 car door lock, P-99 MLC interface). The auto-set procedure allows an optimal tuning of the controller interfaced to the door operator.

NOTE: please refer to chapter 5, for the parameter list and set-up

4.5.1 Auto-set procedure: automatic learning function

This feature allows to automatically learn:

1. Installed motor type
2. Closing rotation
3. Actual skate space
4. Door space

Execution:

STEP	Operation	Action	Result / Checks
1	**Door drive Power off**	Switch off door drive by pressing OFF key	Check the door drive is OFF
2	**Door panels positioning**	⚠ **Set manually the door position at closed panels and skate opened (gap between panels <10cm)** To optimize the execution of the learning procedure, it is suggested but not necessary to couple car and landing door, executing the operations from the car roof in inspection mode.	**Check the correct panels closed position with gap <10cm**
3	**AUTOSET start**	Press and keep pressed key 1, and press ON key. When autoset started, release key 1. **Floor(s) with DTBC contact active (not available for magnetic switches applications):** AUTOSET for second TB will start automatically.	**Press ON button on the door drive front panel, checking that "SL" ("S2" for DTBC contact floor) is shown on the door drive display.** During all the auto-set steps, in case the of errors or alarms, please refer to the NOTE at the end of this table.
4	**Motor check**	Wait	The door moves shortly in both directions to acquire information. The CDD6 performs the motor check: - connections - motor type - closing rotation

5	**Clutch closing**	Wait	The door closes completely, locking the clutch
6	**Clutch measurement**	Wait	The door drive starts opening the clutch at reduced speed, and detects the clutch measure. **ATTENTION: <u>in case of car door only and car door locking device is present, pull manually the car door locking device, to avoid errors</u>.**
7	**Door space measurement**	Wait	The door continues to open at reduced speed to find the door open position
8	**Door closing profile at normal speed**	Wait	The door will close with the current speed profile set, to perform movement and torque analysis
9	**Door opening profile at normal speed**	Wait	The door will open with the current speed profile set, to perform movement and torque analysis
10	**AUTOSET completed**	Wait	The AUTOSET is now completed, the door is open, and the door drive returns immediately in normal mode.

- Table 18: auto-set learning procedure -

In case the procedure ends before it is completed, check the display to have information about the possible errors:

Display	Error	Solution
Al + alarm code	An alarm occurred during auto-set procedure	Refer to alarms table (paragraph 6.1 “Alarms”) and to the related solutions. AL04: wrong motor cables connection AL05: wrong or not present encoder connection AL07: motor cables not connected
Er + error code	An error occurred during auto-set procedure	Refer to error table reported in the next page, and to the related solutions.

- Table 19: possible errors during auto-set learning procedure –

IMPORTANT: in case auto-set procedure completes correctly, but the resulting speed profiles show any anomalous behaviour near the panels closed position, repeat the procedure **paying attention to the initial panel position. For some particular application it is possible that the clutch space cannot be measured correctly, in case set manually the clutch space by parameter P-28.**

In the following page the AUTOSET error table is reported.

"Er"	Error	Description	Actions
1	**Wrong initial door position**	The initial door position is wrong. Or ONLY for magnetic switches application: see Er14	Please check the door is in panels closed position, with gap less than 10cm.
2	**Wrong skate space detected**	The skate space measurement has not been successfully performed.	Please check door operator clutch
3	**Obstacle present**	The procedure has been interrupted due to an obstacle present during profiles check	Remove any obstacle present.
4	**Locking/Unlocking jam**	During AUTOSET execution and profiles check, a locking or unlocking jam has been detected	Check mechanical regulation of the locks and the clutch system.
6	**Motor check**	A valid motor has not been recognized	Check motor connections and installed motor type.
8	**Main power failure**	A failure of the main power supply voltage has been detected	Check power supply
10	**Detector interruption**	A detector (light curtains, photocells) interruption has been detected during procedure.	Check light curtains connections, or avoid to interrupt detector during AUTOSET.
12	**Door moving**	The door was already moving due to external command at the beginning of the AUTOSET	Repeat AUTOSET procedure
13	**Motor**	ONLY for magnetic switches application: A valid motor has not been recognized	Check motor connections and installed motor type.
14	**Wrong magnetic switch**	ONLY for magnetic switches application: the magnetic switch sequence is wrong	Check magnetic switches correct connections for LC RC RA LA.

- Table 20: possible errors during auto-set learning procedure –

4.6 Diagnostic Functions

4.6.1 Diagnostic operations by HMI

The diagnostic operations allowed by door drive front panel are limited, but permit to execute some basic functions as described below.

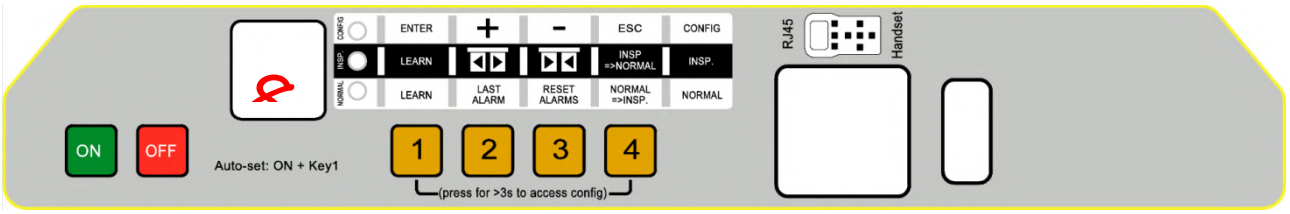

- Figure 4-4: CDD6 front panel -

4.6.1.1 Profiles check in Inspection Mode

It is possible to verify the correct opening and closing of the door, activating the Inspection Mode from the front panel (pressing key 4, until INSP LED is ON). In this mode it is possible to check:

- Correct setting of the closing rotation (pressing key 2 or 3 and checking opening and closing accordingly)
- Correct execution of the normal speed profiles
- Correct setting of the door opened and door closed, checking the feedback from the display that shows “oP” and “CL” blinking and becomes fixed when movement is completed.

4.6.1.2 Alarm code reading and alarms reset in Normal Mode

It is possible to read the last warning/alarm code activated by the door drive keeping pressed the key “2” on the drive front panel, when the drive is in Normal mode. While the alarm is visualized, press key “3” for 3 second to delete it.

4.6.2 Diagnostic operations by Handset

The external handset permits to perform a deep diagnostic of the door controller:

- Check of ALL the settings
- Speed profiles check
- Drive readings check
- Check of ALL I/O

4.6.2.1 I/O diagnostic

Access to "Main Menu" ➔ "Maintenance" ➔ "MLC Monitor" and check the status of ALL inputs and outputs of the door drive. When the signal is active, the correspondent signal description results highlighted.

⚠ **ATTENTION: in this menu the controller returns in Normal mode, and executes all the commands coming from the Main Lift Controller.**

The following table shows the I/O visualization:

INPUTS		OUTPUTS
DOC 5	FFC 39	DOS 17
DCC 3	AUXC 42	DCS 19
RSC 22	DTBC 41	RVS 1-2
RVC 23	EOC 40	AUXS 34-36
DETC 32		BUZS 21

- Table 21: I/O signals reported -

4.6.2.2 Profiles and measurements checks

Access to: "Main Menu" ➔ "Maintenance" ➔ "Monitor". The "Monitor" menu permits to check the speed profiles (speed reported in m/s), output power (in W) and output force (in N). By pressing OK button, it is possible to access to the measurements table as reported below:

MEASUREMENTS	
Column 1	**Column 2**
Last panels opening time (even if partial reopening)	Last panels closing time (even if partial reclosing)
Learned door space (including clutch movement)	Skate Space (set or measured)
Actual door position	
Motor Type	
Instantaneous motor current	
Estimated motor temperature	
Actual Closing force limit	
% of battery charge (-- = battery not connected)	
Mains voltage	

- Table 22: measurements reported in the monitor menu table -

NOTE: the space measurements are calculated based on the encoder mounted on the motor. The absolute precision is then influenced by all the transmission system tolerances.

4.7 Firmware upgrade function

The CDD6 door drive firmware can be upgraded, in case new versions are available, by:

- Computec handset
  - The Computec handset has a USB plug where it is possible to connect a normal USB stick where it is stored the firmware to install. Selecting the upgrade menu, it is possible to choose the correct file and upgrade the CDD6. Please refer to dedicated handset instruction for details
- Computec APP
  - When the door drive is connected via wi-fi to the Computec APP, it is possible to upgrade the door drive by the app following the related instruction.

Verify on the web site "www.computecelectronics.it" any available new firmware versions.

5 Parameters

The CDD6 door drive can be configured by a parameters set, most of them are accessible also from the door drive front panel. The following table reports all the parameters that can be changed by the door drive front panel. The associated functions are described in detail in the next paragraphs. **The parameters highlighted in the table represents the key parameters for the door operator configuration**.

N°	RANGE	UNIT	DEFAULT	Name	Values Description
00	[0 ; 1]	-	0	Reversing events management	00 = internal 01 = external when moving
01	[0 ; 2]	-	0	MLC commands check	00 or 01 = level. 02 = activation edge
02	[0 ; 2]	-	0	Door drive reaction on MLC commands not present	00 = instant stop 01 = low speed + stop 02 = low speed cycle
04	[0 ; 2]	-	0	RVC input option	00 = reversing on RVC edge 01 = reversing on RVC active level 02 = mechanical safety edge
05	**[0 ; 1]**	**-**	**1**	**Car door locking device**	**00 = car door lock not present** **01 = car door lock present**
06	**[0 ; 1]**	**-**	**0**	**Glazed door**	**00 = not present** **01 = present**
07	[0 ; 3]	-	3	AUXS output options	00 = disabled 01 = active during door opening 02 = active after space % reached 03 = Alarm signal
08	[0 ; 99]	%	50	Space percentage (related to P-07=2)	00 = door closed … 99 = door opened
0A	[0 ;2]	-	0	WiFi module enable	00 = disabled 01 = enabled 02 = reset Password & SSID
19	[0 ; 1]	-	1	Fire-Fighting mode	00 = stop without command 01 = EN81-72
20	[1 ; 5]	‘	1	Battery opening cycle duration (related to EOC command function)	Expressed in minutes
21	[0 ; 2]	-	1	RVC signal logic	00 = OFF 01 = N.O. 02 = N.C.
31	[0 ; 2]	-	1	DETC signal logic	00 = OFF 01 = N.O. 02 = N.C.
22	**[0 ; 1]**	**-**	**0**	**Closing rotation**	**00 = clockwise** **01 = counter-clockwise**
23	[10 ; 99]	%	70	% partial opening on AUXC active when P-32=01	(00 = door closed)… 99 = door opened
28	**[0 ; 15]**	**cm**	**9**	**Installed skate space in cm**	**On the front panel display the value is shown in cm.**
29	[0 ; 1]	-	0	PIN21 output option	00 = DISABLED 01 = BUZZER output

N°	RANGE	UNIT	DEFAULT	Name	Values Description
32	[0 ; 3]	-	0	AUXC input options	00 = disabled 01 = partial opening floor input (P-23) 02 = AFT with back-step 03 = AFT with torque free
34	[0 ; 2]	-	0	RVS output signal type	00 = active until DOC (from MLC) 01 = active until DOS 02 = active until P-81 time (pulse)
35	[0 ; 1]	-	0	RVS output signal when door open	00 = OFF 01 = ON
41	[1 ; 30]	s	2	Timeout after AFT or opening force limiter intervention	Pause time after AFT intervention or opening force limiter intervention
43	[0 ; 1]	-	0	Door opened parking without torque	00 = disabled 01 = enabled
47	[0 ; 99]	S	30	Timeout detectors failure	Delay to start force closing in case of detector failure
49	**[0 ; 99]**	**S**	**0**	**CL evacuation delay**	**Delay to start parking with open skate, to be enabled for EN81-20 requirements**
68	[0 ; 15]	cm	5	RSE disabling space at door open	Blind zone for RSE when door open
69	[0 ; 15]	cm	5	RSE disabling space at door closed	Blind zone for RSE when door closed
70	-	-	-	Speed profiles reset	Trigger to reset speed profiles
71	-	-	-	Parameters reset	Trigger to reset all parameters
80	[0 ; 5]	s	1	Closing delay when door opened after inversion	Active only if P-00=0
81	[5 ; 15]	s 10^{-1}	5	RVS output activation time	When P-34=2 this parameter defines the RVS output active time (5⇔0.5s)
82	[0 ; 1]	-	0	DCS signal management during Unlocking jam retries	00= DCS always inactive during retries 01= DCS changes status during retries
84	[0 ; 20]	cm	10	Parking Mode position error	Position offset respect to the skate open position to detect the loss of DCS output
85	[5 ; 20]	cm/s	10	Synchronization trips speed	Speed for synchronization trips
86	[0 ; 1]	-	1	Storage of estimated motor temperature	00 = disabled 01 = enabled
87	[1 ; 3]	-	1	CAN open door number	Door ID in case of CAN bus connection (P-99=4)
90	**0,1,2,3, 4,12,13, …23**	**-**	**0**	**Installed motor type**	**0 = self-recognized for values different from zero, please refer to the motors compatibility table**
91	**0,1,2,3, 4,12,13, …23**	**-**	**0**	**Recognized motor type**	**Represents the ID of the recognized motor, when P-90 = 0. If P-90 ≠0, reports the last recognized ID.**
99	**[0 ; 4]**	**-**	**0**	**MLC commands interface logic**	**0 = DOC DCC RSC in normal logic, RSC is forced closing signal 1 = DOC DCC RSC in reversed logic, RSC is a reduced speed movement enable signal 2 = DOC DCC RSC in normal logic, RSC is a reduced speed movement enable signal 3 = DOC DCC RSC in reversed logic, RSC is forced closing signal 4 = CAN open**

N°	RANGE	UNIT	DEFAULT	Name	Values Description
OPENING PARAMETERS					
A0	[1 ; 40]	mm	20	Door open search threshold offset	Offset for door open position (from P-A1)
A1	[2 ; 20]	mm	5	Door open parking threshold	Final space for door open parking position
A2	[0 ; 50]	mm	5	Acceleration start space	Offset respect to the panels closed position
A3	[10; 50]	mm	20	Back-step space in case of reversing during opening	Space of door re-closing when a reversing source is detected during opening
A4	[10 ; 40]	cm/s	30	Skate speed	Speed for skate opening profile
A5	[2 ; 10]	cm/s	5	Low start speed	Speed for opening profile start
A6	[10;100]	cm/s	50	High speed	-
A7	[2; 10]	cm/s	3	Low final speed	-
A8	[8 ; 24]	cm/s	16	Reduced speed value	-
A9	[5 ; 25]	dm/s^2	10	Stop deceleration limit	-
AA	[1 ; 20]	dm/s^2	7	Profile deceleration limit	Only for magnet switches applications
AB	[1 ; 20]	dm/s^2	7	Acceleration limit	Only for magnet switches applications
AC	[2 ; 12]	A	9	Profile maximum current	-
AD	[2 ; 12]	A	9	Reset trip maximum current	-
AE	[25 ; 75]	%	35	Parking current	Percentage of nominal motor current
B4	[0 ; 4]	-	2	Default Opening profile	
B5	[50 ; 80]	%	60	Profile symmetry	
B7	[0 ; 99]	s	30	Timeout park with reduced current	
B8	[0 ; 50]	mm	20	Unlocking space at power-off	
BA	[0 ; 99]	%	90	Reverse force value	
BB	[0 ; 1]	-	0	Opening reversing type	0=back-step, 1=no-torque
CLOSING PARAMETERS					
C0	[1 ; 20]	mm	2	Door locked search threshold offset	Offset for door close position (from P-C1)
C1	[2 ; 10]	mm	3	Door locked parking threshold	Final space for door close parking position
C2	[0 ; 50]	mm	2	Deceleration end space	Offset respect to the panels closed position
C3	[10 ; 50]	mm	20	Back-step space in case of reversing during closing	Space of door re-opening when a reversing source is detected during closing
C4	[10 ; 40]	cm/s	30	Skate speed	Speed for skate closing profile
C5	[2 ; 10]	cm/s	4	Low start speed	Speed for opening profile start
C6	[10 ; 50]	cm/s	35	High speed	-
C7	[2; 10]	cm/s	3	Low final speed	-
C8	[8; 24]	cm/s	16	Reduced speed value	-
C9	[5 ; 25]	dm/s^2	10	Stop deceleration limit	-
CA	[1 ; 20]	dm/s^2	4	Profile deceleration limit	Only for magnet switches applications
CB	[1 ; 20]	dm/s^2	4	Acceleration limit	Only for magnet switches applications
CC	[2 ; 12]	A	9	Profile maximum current	-
CD	[2 ; 12]	A	9	Reset trip maximum current	-
CE	[25 ; 75]	%	50	Parking current	Percentage of nominal motor current
D4	[0 ; 4]	-	2	Default Closing profile	
D5	[40 ; 80]	%	60	Profile symmetry	
D6	[0 ; 2]	-	2	Closing profile type	
D7	[0 ; 99]	s	10	Timeout park with reduced current	
D8	[-9 ; +20]	mm	5	Reverse disable offset from panels closed position	Offset respect to the panels closed position, to disable reversing
D9	[0 ; 1]	-	1	Closing force limit self-tuning	00=disabled 01=enabled
DA	[0 ; 99]	%	50	Set Force limit	
DB	[8 ; 12]	N*10	11	MIN force limit	
DC	[12 ; 30]	N*10	15	MAX force limit	

- Table23: parameter list of the CDD6 door drive –

5.1 Door operator configuration Parameters

The present paragraph reports the description of all the parameters related to the set-up of the door operator, to associate the door drive to the installed door operator type.
With the auto-set procedure the drive automatically recognizes: motor type, closing rotation, skate type and learns the skate and door space; this procedure permits to the controller to learn the exact skate space, with important advantages respect to the manual settings where the nominal skate space is applied.
In case it is preferred to proceed with the standard door learning, it is necessary to set all the parameter of the door operator, before starting the procedure.

5.1.1 P-28: installed skate space

The installed door operator where the CDD6 is mounted, may have different skate types. To have a correct behaviour (opening and closing speed profiles, final approach to the panels closed, reversing, etc.), it is necessary to set the correct value for this parameter.

Parameter value	Related automatic settings	Note s	Skate representation
skate S20	Aluminium skate Skate space = 20mm OP acceleration start = 20mm CL deceleration end = 25mm	The space measured on the belt between the skate opened and skate closed positions is about 20mm	
skate S90	Iron Skate Skate space = 90mm OP acceleration = 90mm CL deceleration end = 100mm	The space measured on the belt between the skate opened and skate closed positions is about 90mm	
skate S120	Iron Skate Skate space = 120mm OP acceleration = 120mm CL deceleration end = 125mm	The space measured on the belt between the skate opened and skate closed positions is about 120mm	

- Table 24: main skate types -

⚠: it is possible to set manually any installed skate space value, in case the installed skate results different from the ones reported in the previous table, modifying the parameter. It is suggested anyway to perform in this case the auto-set procedure, to learn the exact values for all the parameters influenced by the actual skate space measured on the belt.

5.1.2 P-90: installed motor type

This parameter permits to set the installed motor type, applying the automatic selection or setting manually the installed motor code, as reported in the table below:

Motor type	Reference image			
00 = self-recognized	The door drive automatically detects the motor type connected, only during AUTOSET procedure. Motors automatically recognized:			
	01 	02 	12 	13 
	14 	16 	05 – 07 	06 – 08 
01 = Moog 1Nm (4:1 belt) + Enc500				
02 = Moog 2Nm (4:1 belt) + Enc500				
12 = GR 63x25 + SG80K (15:1) + Enc100 21 = M63x25 + SN31 (15:1) + Enc100 23 = M48x60 + SN 22,6 (7:1) + Enc100				
13 = GR 63x55 + SG120 (15:1) +Enc100 20 = M63x50 + SN40 (15:1) + Enc100				
14 = BG 62x60 + SG120 (15:1) + Enc100 **BRUSHLESS**				
16 = BG 62x30 + SG80K (15:1) + Enc100 **BRUSHLESS**				
05 = DC 1Nm comp. F28/LMDC2010 **with 4 MAGNET SWITCH** 07 = DC 1Nm comp. Digidoor 1Nm **with 3 MAGNET SWITCH**				
06 = DC 2Nm comp. F29/LMDC2011 **with 4 MAGNET SWITCH** 08 = DC 2Nm comp. Digidoor 2Nm **with 3 MAGNET SWITCH**				

- Table 25: selectable motor list –

5.1.3 P-91: recognized motor type

This parameter permits to check the motor type recognized by the door drive during the self-learning procedure, in case the P-90=0 that means the self-recognition of the motor is enabled. In case the motor is recognized successfully, this parameter reports the index of the recognized motor. The P-91 reports in any case the index of the last recognized motor. Please refer to the previous paragraph for the motor indexes.

5.1.4 P-22: closing rotation sense

The motors installed on the field can have the rotation pulley mounted on the right or on the left respect to the motor shaft: this means that the motor, to rotate in the correct sense need to rotate in opposite sense based on the installation type. This parameter permits to configure the correct closing rotation sense, as reported in the following table:

Parameter value	Notes
00 = clockwise (**default value**)	The motor pulley, in frontal view, rotates in **clockwise** sense when door is closing.
01 = counter-clockwise	The motor pulley, in frontal view, rotates in **counter-clockwise** sense when door is closing.

The motor rotation is learned during the AUTOSET procedure. Anyway, it is possible to execute the check of the rotation sense with door operator switched off, or checking the door movement with the door drive in Inspection mode.

5.1.5 P-05: car door locking device settings

This parameter allows to configure the system to manage the unlocking operation when the car door locking device is installed, as reported in the table below. The main function executed by the door controller in case the car door locking device is present is the unlocking movement when main power is off, to permit the evacuation from the car to the floor.

Parameter value	Notes
00 = not present	The car door locking device is not present: in case of black-out, when door is closed, the controller keeps the skate closed, with the residual energy stored inside the controller.
01 = present (**default value**) ⚠	The car door locking device is present: in case of black-out, when door is closed, the controller tries immediately to open the skate and the panels for at least 20mm, with the residual energy stored inside the controller. If the cabin is inside the unlocking zone, this movement permits the unlocking of the hook, and the consequent possibility to open manually the car and landing door. If the car is outside the unlocking zone, this movement is not permitted by the hook, and the car door remains blocked, because the evacuation is not possible. **Pay attention when removing main power during maintenance, motor try to open panels!**

5.1.6 P-06: glass door settings

This parameter allows to configure the installed door type, if with or without glass panels, to activate, if necessary, the functions related to the glass panels, according to the standards limits.

Parameter value	Notes
00 = door panels not glazed (**default value**)	All the door panels of the lift haven't glass panels
01 = glazed door panels	At least one of the door panels of the lift has glass

⚠: refer to paragraph 8.6 for the verification of the standards limits.

5.1.7 P-99: MLC interface logic settings

This parameter permits to configure the MLC commands (DOC, DCC, RSC) management on the door drive, even from the input logic side, that on from the function of the RSC, as reported in the following table:

Parameter value	Notes
00 = DOC DCC RSC active high and RSC function is forced closing at reduced speed signal (**default value**)	The DOC DCC RSC commands are high active (the MLC closes the signals to the used 24Vdc). The RSC signal is a forced closing signal. The activation of the RSC from the MLC means the high priority closing with reduced speed, even if DOC signal is active.
01 = DOC DCC RSC active low, RSC function is reduced speed movement enable signal	The DOC DCC RSC commands are low active (the MLC closes the signals to the used 0V). The RSC command is the enable signal for the reduced speed movement. The activation of the RSC itself does not start any movement, but: DOC + RSC = opening with reduced speed DCC + RSC = closing with reduced speed
02 = DOC DCC RSC active high, RSC function is reduced speed movement enable signal	The DOC DCC RSC commands are high active (the MLC closes the signals to the used 24Vdc). The RSC command is the enable signal for the reduced speed movement. The activation of the RSC itself does not start any movement, but: DOC + RSC = opening with reduced speed DCC + RSC = closing with reduced speed
03 = DOC DCC RSC active low and RSC function is forced closing at reduced speed signal	The DOC DCC RSC commands are low active (the MLC closes the signals to the used 0V). The RSC signal is a forced closing signal. The activation of the RSC from the MLC means the high priority closing with reduced speed, even if DOC signal is active.
04 = CAN OPEN LIFT protocol	The DOC DCC RSC are not active. All the movement commands are coming from CAN open protocol

5.2 Speed profiles

5.2.1 P-B4 and P-D4: Pre-set Speed Profiles

The speed profiles can be changed simply selecting the value of this parameter P-B4 for the opening speed profile, and P-D4 for the closing speed profile, that offers the possibility to choose between 5 pre-set speed profiles:

Parameter value	Notes	Performances
04	Profile 150%	Fast
03	Profile 125%	
02 (**default value**)	Profile 100%	
01	Profile 75%	
00	Profile 50%	Slow

⚠: **refer to paragraph 8.6 to check the standards and code limits.**

The speed profiles are associated both to opening and closing, as shown in the following table:

Profile	Parameters	Default Profile				
		50%	**75%**	**100%**	**125%**	**150%**
OPENING	Low start speed	45mm/s	45mm/s	50mm/s	55mm/s	55mm/s
	High speed	300mm/s	400mm/s	500mm/s	700mm/s	900mm/s
	Low final speed	30mm/s	30mm/s	35mm/s	40mm/s	40mm/s
CLOSING	Low start speed	35mm/s	35mm/s	40mm/s	45mm/s	45mm/s
	High speed	250mm/s	300mm/s	350mm/s	400mm/s	450mm/s
	Low final speed	30mm/s	30mm/s	35mm/s	40mm/s	40mm/s

⚠ **the reported values refer to default conditions, and may be different based on the installed firmware version.**

In case it is necessary to fine tune the speed profiles, it is possible to change the following parameters related to the profile:

Parameter	OPENING Description
1.Skate speed P-A4	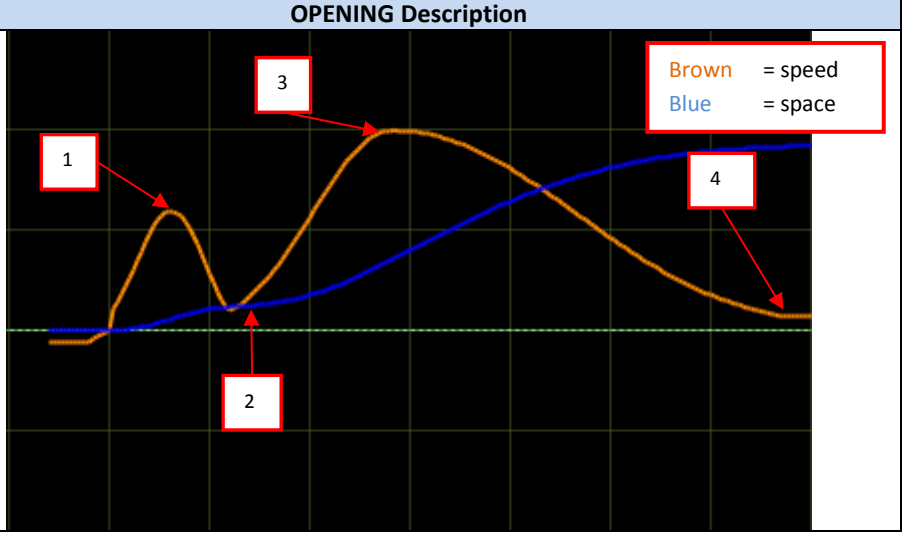
2.Low start speed P-A5	
3.High speed P-A6	
4.Low final speed P-A7	

Parameter	CLOSING Description
1.Skate speed P-C4	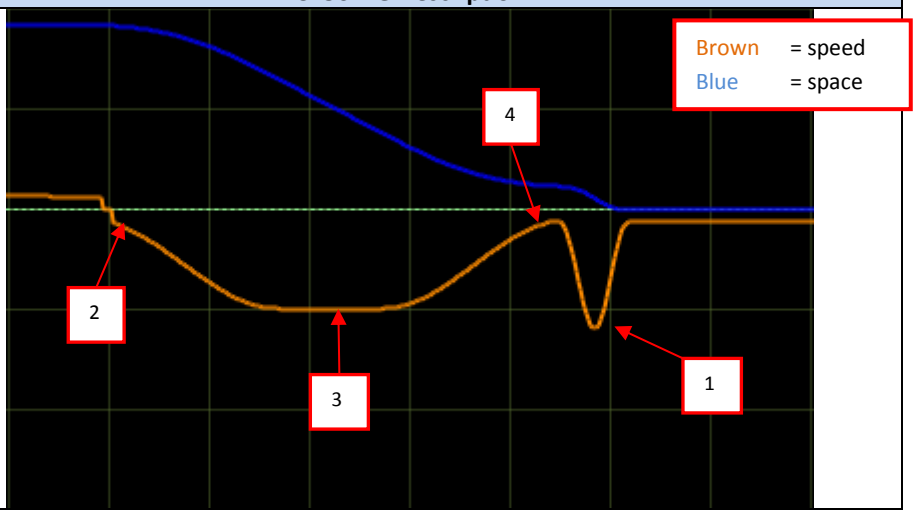
2.Low start speed P-C5	
3.High speed P-C6	
4.Low final speed P-C7	

NOTE: Closing high speed must not exceed the values shown below (10J kinetic Energy):

Panels weight [Kg]	Max High speed
80	500 mm/s
100	440 mm/s
150	360 mm/s
200	310 mm/s
250	280 mm/s
300	255 mm/s

$$High\ Speed \leq \sqrt{20/Weight}$$

Where Speed is expressed in m/s and Weight is expressed in Kg

5.2.2 P-70: Speed Profiles Reset

This parameter allows to reset the speed profiles configuration to the default value, for both opening and closing speed profiles. This is a trigger parameter.

See previous description to check default settings of speed profiles.

5.3 Reversing management in closing direction

5.3.1 P-00: reversing events management

Parameter value	Notes
00 = internal (**default value**)	The door drive, once received the activation of a reversing source, external or internal (closing force limiter), reopens automatically the door activating the RVS output, without waiting for any command from the MLC.
01 = external when moving	The door drive, once received the activation of a reversing source, external or internal (closing force limiter), reduce speed immediately, activates the RVS output and waits for a command from MLC.

NOTE: if values 01 is set, the controller waits always for a DOC command from the MLC to reopen.

5.3.2 P-34: RVS output activation type

This parameter regulates the RVS output duration, as reported in the following table:

Parameter value	Notes
00 = active until DOC command activated (**default value**)	The door drive, once the external reversing source is active or the closing force limiter is active, activates the RVS output that remains active until MLC will activate its DOC command.
01 = active until reopening completed	The door drive, once the external reversing source is active or the closing force limiter is active, activates the RVS output that remains active until the reopening movement is completed, that means when DOS signal is active.
02 = active for a fixed time defined by P-81	The door drive, once the external reversing source is active or the closing force limiter is active, activates the RVS output for a fixed time defined by parameter P-81 (by default set to 0.5s).

NOTE: if P-00 is set to 01, P-34 may be set to 00 or 02 values

5.3.3 P-D9: Closing force limit value Auto-tuning

This parameter permits to enable/disable the auto-tuning function of the closing force limit:

Parameter value	Notes
00 = disabled	The closing force limit auto-tuning function is not active, and the set value for the closing force limit (see next page) remains unchanged.
01 = enabled (**default value**)	The auto-tuning function is active: - Every time that the closing force limiter detects an obstacle, a reversing event is generated. The closing force limiter **automatically increments the closing force limit by 6N**, until the maximum value FMAX (P-DC) - Every time that a closing movement is completed without obstacle, the closing force limiter **automatically decreases the closing force limit by 0.1N,** until the minimum value FMIN (P-DB) This management permits to adapt the system reaction to the change of frictions. **IMPORTANT: when this function is enabled it is very important to define the FMIN limit to avoid false reversing and assure that reversing happens according active codes**.

5.3.4 P-DA: Closing force detection settings

The closing force limit sets the threshold to recognize an obstacle during the door closing; it can be changed from a pre-set minimum value FMIN, until to a maximum value FMAX; also, these limits can be changed. Together with parameter P-D9 (previous paragraph), this parameter permits a complete management of the closing force reversing limit.

There can be particular field installations that have non-optimal working conditions, and where it is necessary to increase the FMAX limit above the nominal 150N.

IMPORTANT: in case of measurement of the actual closing force limit for reversing with a specific instrument, to guarantee the codes limits, it is strongly suggested to set P-D9 to zero and P-DA to 100%, before to execute the measurements of the closing force comparing it with the value of P-DA value, in order to avoid closing force limit auto-adaptation. Please refer to the previous paragraph for the details. After the measurements the parameters P-D9 and P-DA can be re-set to the desired value.

Forces	Default value	Note
FMIN (P-DB)	110N	Adjustable between 80N and 120N
FSET (P-DA)	50%	Adjustable between 0 and 99%
FMAX (P-DC)	150N	Adjustable between 120N and 300N or the maximum force available for the installed motor

NOTE: If P-D9 is set to 01, P-DA will change automatically in according to previous paragraph.
P-DA = 0% is equivalent to FMIN (P-DB), P-DA = 99% is equivalent to FMAX (P-DC).

5.3.5 P-D8: Reversing Disabled offset at the end of closing

This parameter allows to fine tune the obstacle detection disabled space, that disable also the closing force limiter, at the end of the closing movement. The parameter represents the offset respect to the position of panels closed and skate opened. The set value may be affected by possible errors related to the skate settings, or skate measurement during installation. The correct settings of the skate space with P-28 (paragraph 5.1.1) has to be verified, before applying any modification to this parameter.

Value	Value in mm	Notes
-9	-9mm	Minimum: the closing force limiter is active also when panels are closed and the skate is partially closed -9mm in case of side doors -18mm in case of centre doors
0	0mm	Panels closed and skate opened position
Default	+5mm	This setting allows to theoretically detect obstacle: 5mm in case of side doors 10mm in case of centre doors
20	+20mm	Maximum: the closing force limiter is disabled 20mm before the panels are closed. 20mm in case of side doors 40mm in case of centre doors

⚠ **IMPORTANT: the set value is a theoretical value, and it is strongly affected by external factors (belt tension, mechanical tolerances, etc.). verify the actual minimum obstacle detected and perform a fine tuning in case of need.**

5.4 MLC interface management

5.4.1 P-01: MLC commands check mode

This parameter defines how the door drive checks the commands coming from MLC. The following table shows the possible options:

Parameter value	Active command status	Notes
00 or 01= level (**default value**)	Signal level always checked	The command is considered active until the input signal is present. During parking the command can be removed
02 = edge		One activation edge of the command is enough to generate a complete door movement. **Suggested only when strictly necessary (old MLC compatibility)**

5.4.2 P-02: reaction of door drive if no MLC command

This parameter defines the behaviour of the door drive when no commands are present from MLC and P-01 is set to 00 or 01, when the door is at intermediate position (not completely closed and not completely opened).

Parameter value	Notes
00 = instant stop (**default value**)	The controller, in case no commands are present, stops immediately the door and keeps the actual position with low torque applied to the motor.
01 = low speed + stop	The controller completes the current movement with reduced speed until the final position is reached
02 = low speed cycle	The controller executes a reduced speed cycle: at the commands interruption, the door opens completely with reduced speed, remains opened for 30s, then closes completely with reduced speed (evacuation oriented).

5.5 Input signals management

5.5.1 P-04: RVC input function

This parameter permits to set type and function related to the RVC command input.

Parameter value	Notes
00 = edge reversing input signal (**default value**)	The signal connected to the RVC pin is a dry contact from an external reversing source (light curtains, photocells, …). The activation of the signal during door closing implies the door reversing until the complete reopening of the door (according to P-00 settings that defines if the controllers reopens automatically or waits for a MLC DOC command)
01 = level reversing input signal	The signal connected to the RVC pin is a dry contact from an external reversing source (light curtains, photocells, …). The activation of the signal during door closing implies the door reversing and reopening until RVC is active (according to P-00 settings that defines if the controllers reopens automatically or waits for a MLC DOC command)
02 = mechanical safety edge	The signal connected to the RVC pin is a dry contact from an external retractable safety edge. In this case the controller applies a signal filter to disable the input signal based to the door position, when the door is in the "blind zones" of the safety edge, that means the positions where the edge retracts automatically near to the door opened position and near to panels closed position. The values of these "blind zones" are programmable as parameters: "Disabling threshold start closing P-68": default 50mm, adjustable from 0mm to 150mm "Disabling threshold end closing P-69": default 50mm, adjustable from 0mm to 150mm. The diagram below reports the "blind zones" position: 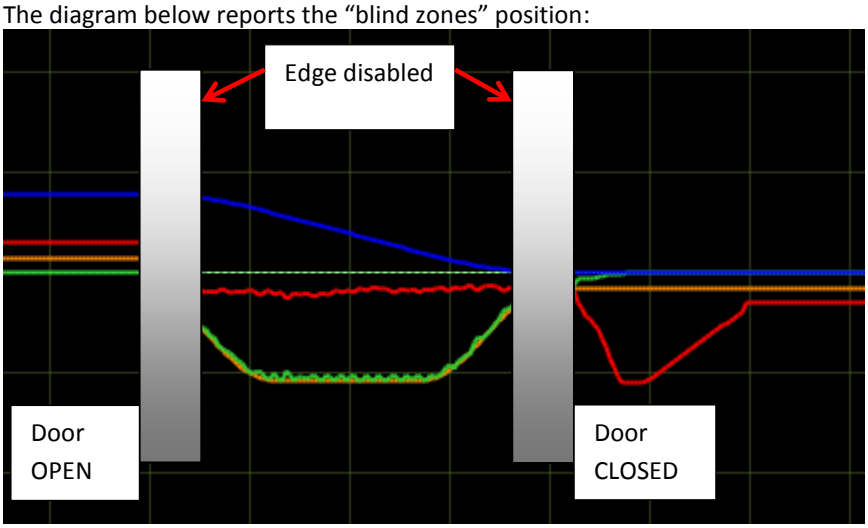

5.5.2 P-21: RVC input logic settings

This parameter allows to set the RVC input signal logic.

Parameter value	Note
00 = OFF	The signal connected to RVC input is not active
01 = Normally OPEN (**default value**)	The signal connected to RVC input is normally open signal
02 = Normally CLOSED	The signal connected to RVC input is normally closed signal

5.5.3 P-31: DETC input logic settings

This parameter allows to set the DETC input signal logic.

Parameter value	Note
00 = OFF	The signal connected to DETC input is not active
01 = Normally OPEN (**default value**)	The signals connected to DETC input is normally open signal
02 = Normally CLOSED	The signals connected to DETC input is normally closed signal

5.5.4 P-32: AUXC input function

This parameter allows to set the AUXC input function.

Parameter value	Notes
00 = disabled (**default value**)	No function is associated to the AUXC input
01 = partial opening	The signal connected to the AUXC input is a special contact that is active when the car is stopped at one or more particular floors that have landing doors with different reduced opening space. With the P-23 parameter "% partial opening" it is possible to set the opening percentage based on the door learned space associated to the complete car door opening space. Example: side car door, width 1200mm Special floor with 1000mm opening space ➔ P-23 = (1000/1200) % = 83% Example: Central car door, width 1200mm Special floor with 1000mm opening space In this case the door is seen from the door drive as 1200mm/2 = 600mm but the proportion remains unchanged ⇨ P-23 = (1000/2) / (1200/2) = 1000/1200 = 83%.
02 = external "anti-finger trapping" device with back-step	The signal connected to the AUXC input comes from an anti-finger trapping device, to activate the reversing during opening: the reclosing is performed as defined by P-A3 and then the door is stopped, until the signal is active. When AUXC signal is no more active waits P-41 delay and then the door returns to execute the active command. Normally the AFT it is a sensitive strip applied to the moving door panels made with glass, to prevent the finger trapping.
03 = external "anti-finger trapping" device with torque free	The signal connected to the AUXC input comes from an anti-finger trapping device, to activate the reversing during opening: when the input is active, the door is immediately stopped and the torque is removed from the motor, until the AUXC signal is active. When AUXC signal is no more active waits P-41 delay and then the door returns to execute the active command. Normally it is a sensitive strip applied to the moving door panels made with glass, to prevent the finger trapping.

5.5.5 P-19: FFC options

This parameter sets how the controller manages the door movements, when the FFC command is active, and the system is in Fire-Fighting mode. The other reversing sources eventually connected to the controller (barriers, photocells) are always disabled when FFC command is active. The closing force limiter is in both cases set to a reduced sensitivity.

Parameter value	Notes
00 = closing force limiter disabled	The controller, when in Fire-Fighting mode, drives the door closing with the closing force limiter disabled (the door operation is manually managed by the fire-fighter directly from the car). The door stops any movement in case non commands are present.
01 = Closing force limiter enabled with reduced sensitivity (**default value**)	EN81-72: The controller, in any door closing condition (also during reduced speed closing), keeps the closing force limiter active, with sensitivity reduced to the minimum. In case no commands are present, the door will perform according to the code: If the door was opening, the door will close If the door was closing, the door will reopen

5.5.6 P-20: EOD function time-out (based on EOC input)

This parameter allows to change the total time of the emergency opening cycle. This function is active when:

1. The emergency battery is connected to the door drive (+ and – plugs of the X4 connector)
2. The EOC contact is installed at the evacuation floor, and connected to the EOC input plug of the X3.2 connector.

In this way, when the main power supply fails, the MLC drives the car to the emergency floor. The door controller then detects the EOC input active, and proceed with a temporized opening of the door. Once the set time is elapsed, the door will close.
The total time of this cycle (from door closed to door closed) is defined with this parameter. The parameter is expressed in minutes and it is adjustable in the range [1 ; 5]minutes. The default value is 1’.

5.6 Output signals management

5.6.1 P-07: AUXS output options

This option permits to configure the AUXS output, that is a double contact relay.

Parameter value	Notes
00 = disabled	The AUXS output not used
01 = active during door opening	The AUXS output is active when the door is opening. In this case it is normally connected to an acoustic device (gong), that indicates the opening movement in progress.
02 = space percentage	The AUXS output is active when the door position reached is higher than the space percentage indicated by the P-08 parameter
03 = Error signal (**default value**)	The AUXS output is active when the door drive is in alarm status, or in case of motor overheating.

5.6.2 P-A0: DOS output activation threshold

This parameter allows to configure the DOS output activation offset. During the door opening, the controller checks that door position reaches the door opened position, verifying:

1. The space quote is reached
2. The end position is reached, detecting panels hitting the bumpers

To cover installation tolerances, this parameter permits to accept door open position lower than learned open parking position, until 40mm less.

- Default value: 20mm
- Range: [1 ; 40]mm

⚠ IMPORTANT: in case this offset is reached, and the DOC is deactivated, the door will anyway complete the opening movements, keeping DOS output signal active.

The figure below shows the operating zone of the parameter:

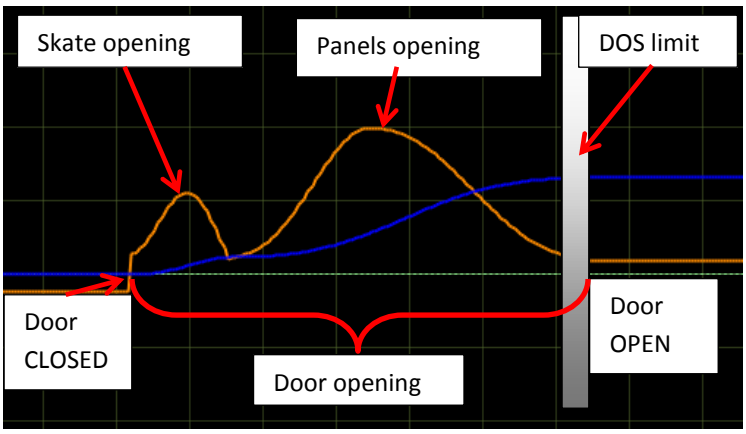

- Figure 5-1: door opening profile and DOS activation zone -

5.7 Door Closed parking management

5.7.1 P-49: Door Closed evacuation delay

This parameter permits to enable the "Parking with Skate Opened" (PSO) function.

Parameter value	Notes
00 = PSO not active (**default value**)	The controller, during parking with door closed, keeps ALWAYS the skate closed, applying a reduced parking torque to the motor enough to keep the closed position.
01…99 = PSO active	The controller enables the PSO function, activating the PSO after the correspondent delay in seconds

The door closed parking phase generates, mainly for long parking period during lift unused time, a power consumption and a continuous torque applied to the motor to keep the skate closed also if the car is parking at the floor.

For this reason, the PSO function has been developed. To manage this option, it is necessary that MLC:

1. Removes DCC command when car is parking at the floor without calls
2. Not activate error or alarms, in case the safety chain gets open during the parking phase at floor after PSO activation (the open skate opens the locks)
3. Activate DCC command at least 2s before the car starts to move for a call

If all the previous conditions are satisfied, it is possible to exploit all the advantages given by the PSO function.

In the table below are reported all the parameters that configure the PSO management.

⚠ **The PSO function is required for EN81-20 applications, and it must be set to a value different form zero (suggested 10s)**

P-84: PSO position error

Parameter	Range	Default value	Description
P-84	[0 ; 20] mm	10mm	Maximum position error in opening direction, after which the DCS is disabled and the controller gets out of PSO mode

The PSO function activation sequence is reported in the table below:

N.	Phase	MLC signals	CDD6 signals	Notes
1	Closed skate parking	DCC active RSC not active	DCS active	Skate closed, parking torque applied to the motor
2	Delay to open skate	DCC not active RSC not active	DCS active	Door drive waits for PSO activation delay expiration. If during this phase DCC is activated the door drive returns to phase 1
3	Skate opening	DCC not active RSC not active	DCS active	The door drive opens the skate. If in this phase DCC is activated the controller goes to phase 5
4	Parking with opened skate	DCC not active RSC not active	DCS active	The door drive is in active PSO, with opened skate and panels closed; the position control is set by a space control. If in this phase DCC is activated the door drive goes to phase 5
5	Skate closing	DCC active RSC not active	DCS active	The door drive closed the skate, because of DCC active
6	DCS deactivation	DCC not active RSC not active	DCS not active	If an external force moves the panels in opening direction to a position higher than P-84, the controller removes the DCS output and returns to wait for a MLC command.

⚠ if in any phase of this sequence the MLC activates the DOC command, the door begins immediately the requested opening movement, starting from the current door position.

5.8 EN81-20 functions parameters

5.8.1 P-49: Door Closed evacuation delay

This parameter, described in the previous paragraph at 5.7.1, is strictly related to the EN81-20 evacuation function. In case of installation on EN81-20 lift, it is STRICTLY necessary to set the value of this parameter to a value different from zero, to permit the clutch relaxing when the door is parking at the floor.

Parameter value	Notes
00 = PSO not active (**default value**)	The controller, during parking with door closed, keeps ALWAYS the skate closed, applying a reduced parking torque to the motor enough to keep the closed position.
01…99 = PSO active	The controller enables the PSO function, activating the PSO after the correspondent delay in seconds

⚠ **The PSO function is required for EN81-20 applications, and it must be set to a value different form zero (suggested 10s)**

5.8.2 P-47: Time-out detector failed

This parameter allows to activate the reduced speed closing, when external reversing sources are active for the defined time, meaning that the reversing source is broken.

Parameter value	Notes
00 = function disabled	The function is not enabled
01…99 = function enabled (**default value is 30s**)	The door drive will start the reduced speed closing sequence as described below, after the defined time-out. Sequence: • Door open • RVS active with P-00 = 0 • DCC active • The door remains open, since reversing source is active. • After the timeout defined by P-47 parameter, the door drive will start to close the door at reduced speed, with kinetic energy limited to 4J.

5.8.3 P-BA: Opening force limiter

This parameter allows to activate opening force limiter, that must be active according to EN81-20, at least for the door made of glass.

Parameter value	Notes
00 = function disabled	The function is not enabled
01…99% = function enabled (**default value is 90%**)	The function is enabled, and the percentage represents the opening force limit set to generate the reversing. In case the opening force limit is overpassed, the door drive will react according to P-BB settings as described in the next table.

⚠ **it is strongly recommended to measure with appropriate instrumentation to verify the code limit of 150N.**

5.8.4 P-BB: Opening reversing type

This parameter allows to activate different reactions on the door drive, after an opening force limiter detection.

Parameter value	Notes
00 = back-step (**default value**)	In case the opening force limit is overpassed, the door drive will react as follows: - Stops immediately the door - Performs a back-step in the closing direction according to P-A3 mm - Waits for a time-out according to P-41 settings. During this time the commands are ignored until the timeout is expired. After that the door drive will execute the active command.
01 = no torque	In case the opening force limit is overpassed, the door drive will react as follows: - Stops immediately the door - Removes the torque to the motor, so the door can be moved manually - Waits for a time-out according to P-41 settings. During this time the commands are ignored until the timeout is expired. After that the door drive will execute the active command.

5.9 Particular Parameters

5.9.1 P-43: Door open parking with no torque

This parameter permits to enable the opening parking without torque applied to the motor. The are some field installations with landing manual swing doors, and car automatic sliding doors, the normally park at the floor with the car door opened to permit the manual opening of the landing swing door.

This condition, similarly to the closed parking management, implies a continuous torque applied to the motor. To avoid this, it is possible to enable this function.

Parameter value	Notes
00 = OP parking with reduced torque NOT ACTIVE (**default value**)	The controller, during the OP parking phase, keeps always active the parking torques to the motor.
01 = OP parking with reduced torque ACTIVE	The controller activates the OP reduced torque parking function

5.9.2 P-85: Reset Speed value

This parameter allows to change the reduced speed value during power ON synchronization trip

Parameter	Range	Default value
Reduced speed	[50 ; 200] mm/s	100 mm/s

5.9.3 P-A8 / P-C8: Reduced Speed value

This parameter allows to change the reduced speed value during reduced speed trips (when RSC is active)

Parameter	Range	Default value
Reduced speed	[80 ; 240] mm/s	160 mm/s

NOTE: Reduced speed must not exceed the values shown below (4J kinetic Energy):

Panels weight [Kg]	Max Reduced speed
80	310 mm/s
100	280 mm/s
150	230 mm/s
200	200 mm/s
250	180 mm/s
300	160 mm/s

$$\boldsymbol{Reduced\ Speed \leq \sqrt{8/Weight}}$$

Where Speed is expressed in m/s and Weight is expressed in Kg

5.9.4 P-29: PIN21 output management

This parameter allows to manage the PIN21 output of the door drive. This output is an open collector output, that can be set to activate acoustic signal, base on particular working conditions.

Parameter value	Notes
00 = DISABLED (**default value**)	The pin21 output is disabled: the output is never activated by the door drive
01 = BUZZER	The pin21 output is activated: - During the reduced speed closing when RSC command is active and the related parameter P-99 is 0 or 3. - During the reduced speed cycle, when P-02 = 1, or P-02 = 2

5.9.5 P-35: RVS output management in door open position

This parameter allows to manage the RVS signal when door is in open position. The following table shows the settings.

Parameter value	Notes
00 = OFF (**default value**)	In door open condition, when door is parking, the RVS signal is never activated, even if the reversing sources (DETC or RVC) are active. This means that the door drive does not inform the lift controller if an external reversing source is active when the door is parking in open position, permitting the closing of the door. If the reversing source is active when the DCC is active, the door drive will immediately activate the RVS signal, and reacts according to P-00 settings.
01 = ON	In door open condition, when door is parking, the RVS signal is activated every time the external reversing sources (DETC or RVC) are active. This means that the door drive informs the lift controller if an external reversing source is active when the door is parking in open position, permitting the reset of the closing timer or the final timer on the lift controller side.

5.9.6 P-80: Closing delay when door completely reopened after reversing

This parameter allows to activate a delay, when the door is completely reopened in front of reversing during closing, when the P-00 is set to zero (internal reversing management). When the door has completed the reopening movement, and the DCC command is still present, the door drive applies this delay, before to execute the next closing movement. This delay is not applied in case of partial reopening movement, when the closing starts in intermediate position.

Parameter value	Notes
00 = function disabled	The delay is not applied, so when the door has completed the reopening, and the DCC command is active, the door will start closing immediately.
01…05 = function enabled (**default value is 1s**)	The delay is applied, so when the door has completed the reopening, and the DCC command is active, the door will start closing only when the timeout is expired.

5.9.7 P-82: DCS management during Unlocking jam retries

This parameter allows to manage the DCS signal when door is performing the unlocking retries to open the clutch. The door drive implements the management of retries in case of:

- Door opening: at the beginning of door opening, the door drive opens the clutch, but in case of jam the door drive recloses the clutch (returns to door locked position) activate AL03 warning, and after 1s retries to open the clutch. After the 5rd retry the door drive stops in door locked position.
- Door closing: at the end of door closing, the door drive close the clutch, but in case of jam the door drive reopen the clutch (returns to door unlocked position) activate AL03 warning, and after 1s retries to close the clutch. After the 5rd retry the door drive stops in door unlocked position.

During the unlocking retries the door drive can be configured to toggle the DCS signal, to inform the lift controller that the retries are in progress. The following table shows the settings.

Parameter value	Notes
00 = OFF (**default value**)	The DCS signal never changes status during locking/unlocking retries. - Unlocking retries: the DCS signal is always INACTIVE
01 = ON	The DCS signal changes status during locking/unlocking retries. - Unlocking retries: the DCS signal is INACTIVE when the door is opening the clutch, and ACTIVE when the door is reclosing the clutch

5.9.8 P-86: Storage of estimated motor temperature

The door drive estimates the motor temperature with I2T algorithm, since there isn't physical thermal sensor on the motors. This parameter allows to activate the storage of the estimated motor temperature, to keep the last value of the estimated motor temperature at the controller start-up. The following table shows the settings.

Parameter value	Notes
00 = DISABLED	The estimated motor temperature is not stored in the internal memory. Every time that the door drive is switched off, at the next power-on the estimated motor temperature is set to 25°C. Then the motor temperature is updated based on the door drive algorithm.
01 = ENABLED (**default value**)	The estimated motor temperature is stored periodically (every 30') in the internal memory. Every time that the door drive is switched off, at the next power-on the estimated motor temperature is set last saved value. Then the motor temperature is updated based on the door drive algorithm.

5.10 Motor Thermal management

The monitoring of the motor thermal state is important to:

- Prevent motor over-heating
- Preserve the motor to extend its lifetime
- Prevent functional problems

The motor in use does not have temperature probes installed inside, for this reason the motor temperature is estimated based on a I2T model. For each motor type are defined the Thermal Resistance and Capacity, used with the motor current to calculate the motor temperature estimation.
Under particular working condition (wrong mechanical or electrical settings, too heavy door for the installed motor type, additional frictions, etc.), it can happen that during the normal working cycle of door opening and closing, the estimated motor temperature derives, this is a symptom of motor over-heating. If the estimated motor temperature becomes higher than:

- the first threshold (85°C), the door drive activates AUXS output (if configured by P-07).
- the second threshold (95°C) the door speed is reduced both for opening and closing
- the alarm threshold (110°C), the door drive stops the door and, and waits for the recover temperature (75°C) to restart normal behavior.

The following diagrams represent the behavior of the descripted signals.

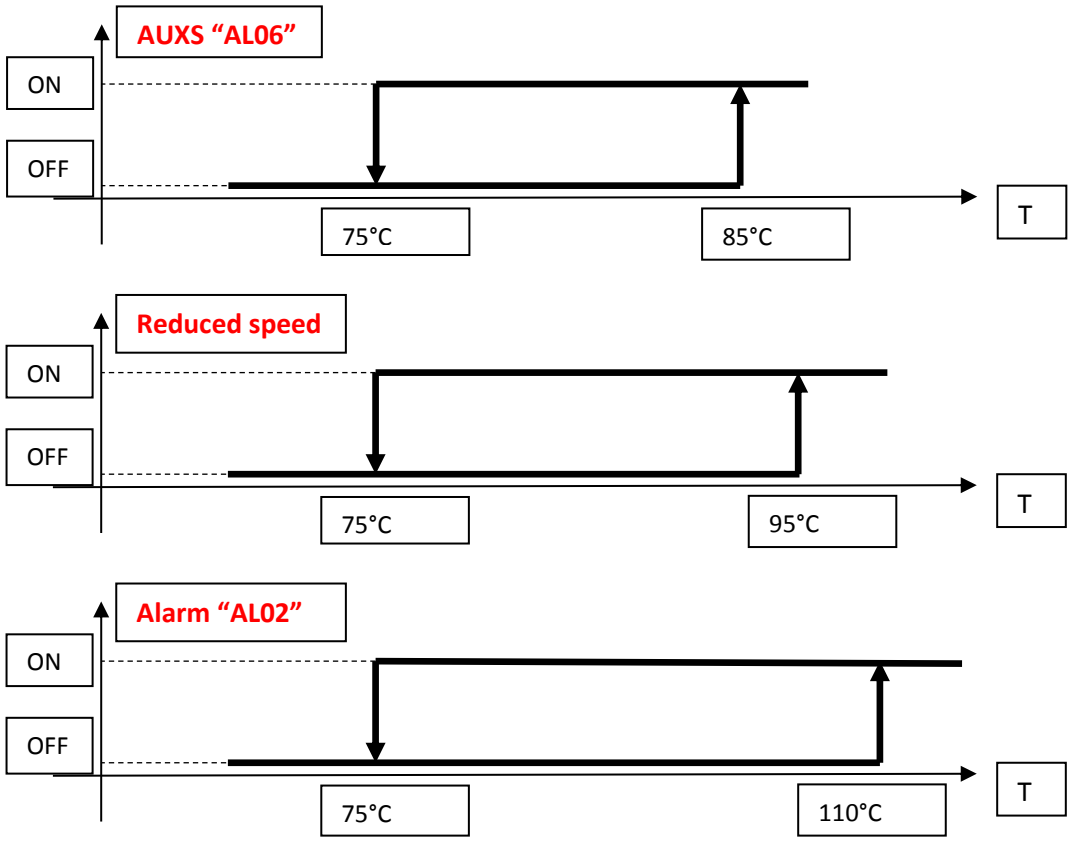

- Figure 5-2: thermal trend under progressive over-heating conditions -

The repetitive activation of thermal protection, is a clear symptom that the working conditions are not correct for the installed system, and deep checks have to be performed on the mechanical system and settings and on the motor / door moving mass ratio.

6 Maintenance

6.1 Alarms

The CDD6 door drive implements a warning/alarms/errors list, with which it can communicate functional errors external or internal of the CDD6; these codes are very important to detect the causes of issues during maintenance phase.

The following table reports the codes list.

"AL"	Alarm	Description	Actions
1	Parameter mismatch	An internal parameter set integrity error has been detected	This event automatically recovers after internal check
2	Motor overtemperature	The estimated motor temperature is over the alarm threshold	Check door operator and panels, check manually free movement of the door, remove friction. Check speed profiles and door duty cycle timings
3	Lock/Unlock failure	The locking/unlocking of the clutch was not possible due to obstacle or mechanical jam	Check clutch movement and remove any mechanical jam source. Check clutch roller and pin. The clutch has to be free when the panels are closed.
4	Motor connection error	The motor has been cabled reversing the phase wires	Check motor cable connection and correct it
5	Motor encoder failure	The motor encoder signal is not working properly	Check motor encoder cable connection
6	Motor overtemperature	The estimated motor temperature is over the warning threshold	AUXS output (if configured by P-07).
7	Motor jerk	The motor cable is not connected or one single wire is not connected	Check motor cable connection and fix it
8	Overvoltage	The maximum value of the Vbus voltage has been reached	Check speed profile according the moving mass, and reduce the speed profile and/or P-A9 and/or P-C9
9	Motor output short-circuit	There is a short-circuit on the motor output	Check the motor integrity, and the motor cable connection. Remove any possible short-circuit
11	Power unit overtemperature	The estimated temperature of the power supply unit reached the maximum value.	This event is automatically recovers when the estimated temperature decreases below the recovery threshold. Check power consumption related to: applied speed profiles, moving mass, door duty cycle.

12	Class B error	Test of analogic reading has not passed	Check motor cable connection
13	Power supply overvoltage and undervoltage	The input power supply voltage is lower than the minimum allowed threshold or higher than the maximum allowed threshold	This event automatically recovers when the power supply voltage returns to normal value. Check power supply voltage, and available input power according to door drive specifications.
14	Class B error	Test of analogic offset has not passed	-
15	Upgrade error	The firmware upgrade was not performed. The CDD6 is working, but the firmware upgrade is not possible	-
16	Storage memory error	An internal storage memory (parameters, statistics, …) error has been detected	-

6.2 Troubleshooting (FAQ)

The table below reports the most common possible issues, with the related solutions.

ID	Problem	Actions
1	The system does not switch ON	- Check the presence of the main power supply voltage, within the declared operating range - Check that power cable is connected to X1 plug of the controller - Check status of F1 fuse - Check that ON button has been pressed
2	The panels don't move	- Check that no obstacle/frictions are present and that the panels movement is free - Check that all motor connections are present - Check main power supply presence - Check that door drive is powered and switched ON - Check the door movements in Inspection mode - Check RVC-DETC logic input P-21 P-31
3	The system switches ON, but the door does not move properly	- Check the movements in Inspection mode: o if the door is moving in the opposite side ➔ check P-22 settings o if the display shows an alarm code ➔ refer to the alarms table - Check the speed profiles: o The door is moving with reduced speed ➔ check if RSC input is active and that P-99 is correctly set o The door does not move and the display shows an alarm code ➔ refer to the alarms table
4	The system moves properly in Inspection mode, but not in Normal mode	- Check if CDD6 is correctly set in Normal mode - Check the correct opening after DOC activation without RCS command active - Check the correct closing after DCC activation without RCS command active - Check correct settings of parameter P-99
5	The system does not react to the activation of the external reversing sources	- Check that external reversing sources are correctly connected to the door drive and that the wirings are correct - Check the reversing sources are correctly powered and switch according the obstacle presence. - Check the correct settings for parameters P-04 P-21 P-31
6	The system does not activate the closing force detection	- Check correct settings for closing force limit - Check correct settings of parameters P-00.

- Table 26: Trouble-shooting -

In the next paragraph are reported, in a more detailed way and as check-list, the main situations described in the previous table, with the related checks and actions to be performed so to fix the possible issue.

6.3 Correct working check sequence

The following table reports the sequence of checks and actions to be executed for a functional test on the field. Based on the problem found on the field, start the sequence from the related step.

Problem	Check	STEP	Question	Answer	Action
The system does not work	Main power supply voltage check	1	Is the controller powered? Is the front panel display showing "- -", "oP" or "Cl"?	NO	Go to step 2
				YES	Go to step 6
		2	Is the power supply cable connected to door drive?	The power supply cable is NOT connected	Connect power supply cable and return to step 1
				The power supply cable is connected	Go to step 3
		3	Check that power supply voltage is inside the declared operating range: [90;290] Vac single phase	The supply voltage is correct	Go to step 4
				The supply voltage is NOT correct	Correct power supply voltage and return to step 1
		4	Check CDD6 F1 fuse	F1 is open	Replace fuse F1 and return to step 1
				F1 is OK	Go to step 5
		5	Press ON button on the door drive front panel	The display is not showing anything	Go to step 6
				The controller starts	Go to step 7
		6	Check if the NORMAL LED is ON	The NORMAL LED is ON	ON button does not work
				The NORMAL LED is OFF	The controller is not working

Problem	Check	STEP	Question	Answer	Action
The system switch ON but does not move properly	Movement check in Inspection mode	7	Activate the Inspection mode (press key 4 for 1s, or until INSP. LED is ON)	Door already closed by external command ("CL" fixed on the display).	Go to step 8
				The display shows an alarm ("AL" alternate to alarm code)	Refer to alarms table (paragraph 6.1)
				Il display shows "- -".	Go to step 8
		8	Press and keep pressed key 2 to open, then press and keep pressed key 3 to close and check the panels movement	The door is moving properly: it closed when key 3 is pressed and opens when key 2 is pressed	Go to step 9
				The door is not moving and the display shows an alarm ("AL" alternate to alarm code)	Refer to alarms table (paragraph 6.1)
				The door is moving in the opposite direction: it's closing instead opening and opening instead closing	Check the set closing rotation and correct parameter P-22. Then return to step 7
		9	Check opening speed profile. Press and keep pressed key 3 to close completely the door, until "CL" is shown fixed on the display. Then press and keep pressed key 2 until the door is completely open ("oP" shown fixed)	The door opens correctly with the set speed profile	Go to step 10
				The door opens with reduced speed	The RSC command (X3.1.22) is active. Correct wiring or settings (P-99)
				The door is not moving and the display shows "CL"	The RSC command (X3.1.22) is active. Check wiring or settings (P-99)
				The door opens with speed too low or too high	Change speed profiles (P-B4)
		10	Check closing speed profile. Press and keep pressed key 3 to close the door, until the door is completely closed ("CL" shown fixed)	The door closes correctly with the set speed profile	Go to step 11
				The door closes with reduced speed	The RSC command (X3.1.22) is active. Check wiring or settings (P-99)
				The door closes with speed too low or too high	Change speed profiles (P-D4)
				The door is not moving and the display shows "oP" or the door moving but the display shows "IM"	The RVC or DETC command (X3.1.23 or X9.32) is active. Check wiring or settings (P-21 or P31)

Problem	Check	STEP	Question	Answer	Action
The system is moving properly in Inspection mode, but does not work in Normal mode	Movements check in Normal mode	**11**	Check if the door drive is in Normal mode	NO	Activate normal mode (press key 4 for 1s, or until NORMAL LED is ON)
				YES	Go to step 12
		12	Apply an opening command to DOC input (X3.1.5)	The door opens properly with the set speed profile	Go to step 14
				The door opens with reduced speed	The RSC command (X3.1.22) is active. Check wiring or settings (P-99)
				The door is not moving and the display shows an alarm (“AL” alternate to alarm code)	Refer to alarms table (paragraph 6.1)
				The door is not moving or is moving not properly	Go to step 13
		13	Check if DOC command is really active: if available, with the external handset access to “MLC monitor” menu (4.4.2) and check if DOC is active (highlighted)	The DOC opening command is not active	Check commands wirings (X3). Check that supply voltages are correct. Then return to step 12
				The DOC opening command is active	Check that ONLY DOC command is active and that DCC or RSC are not active. Check the set speed profile and, if necessary, perform a speed profile reset (5.2.2). then return to step 12
		14	Apply a closing command to DCC input (X3.1.3)	The door closes correctly with the set speed profile	Go to step 16
				The door closes with reduced speed	The RSC command (X3.1.22) is active. Check wiring or settings (P-99)
				The door is not moving and the display shows an alarm (“AL” alternate to alarm code)	Refer to alarms table (paragraph 6.1)
				The door is not moving or is moving not properly	Go to step 15

		15	Check if DCC command is really active: if available, with the external handset access to “MLC monitor” menu (4.4.2) and check if DCC is active (highlighted)	The DCC closing command is not active	Check commands wirings (X3), in particular the DCC. Verify that all the supply voltages are correct. Then return to step 14
				The DCC closing command is active	Check that ONLY the DCC command is active. Check the set speed profile and, if necessary, perform a speed profile reset (5.2.2). then return to step 14
Problem	**Check**	**ST**	**Question**	**Answer**	**Action**
The system does not reverse after activation of one or more reversing sources	Check of the reversing sources, internal and/or external	16	Closing force limiter check. Open the completely the door. Close the door putting an obstacle between panels	The door, when the panels touch the obstacle, reverses and reopens.	Go to step 17
				The door, when the panels touch the obstacle, continues to push against the obstacle	Check the settings of the closing force limit and the P-00 setting: if P-00 set to external check that DOC command is activated from MLC after activation of RVS by the CDD6. Correct settings. Then repeat step 16
		17	Check reversing source connected to RVC input (X3.1.23): with the external handset access to “MLC monitor Q.M.” menu (4.4.2), activate the external reversing device and check that RVC is active (highlighted)	The RVC signal is active	Go to step 18
				The RVC signal is not active	Check RVC connection (X3.1.23) and verify the correct settings for: P-04 (5.5.1) or P-21 (5.5.2). Then repeat step 17
		18	Check reversing source connected to DETC input (X9): with the external handset access to “MLC monitor Q.M.” menu (4.4.2), activate the external reversing device and check that DETC is active (highlighted)	The DETC signal is active	Go to step 19
				The DETC signal is not active	Check the light curtains connection and the setting of P-31 (5.5.23). Then repeat step 18

	Check proper working of RVS output	**19**	Check closing force limiter. Open completely the door. Then close the door putting an obstacle between panels. with the external handset access to “MLC signal monitor” menu (4.4.2), and check that RVS output is active (highlighted)	The RVS outputs is active based on the settings of parameter P-34 (5.3.2).	Go to step 20
				The RVS signal is not active	Check the closing force reversing activates correctly. Check the settings of P-34 (5.3.2), if P-34=2 note that the RVS signal will be active only for 0.5s. Repeat with P34=0.
	Check false reversing (execute this test only in case the door reverses during closing without any obstacle)	**20**	From door open condition apply a closing command and check the actual closing profile	-	Check if any friction is present (dust accumulated on the sill, mechanical settings on the operator). Go to step 21
		21	Switch off the door drive and check manually the panels movement	Mechanical issues or frictions are present	Fix mechanical issue, remove the dust from the sill. Repeat step 20.
				The panels movement is free without any friction	Switch ON the door drive and check the force limits settings: if necessary, increase the P-DB P-DC or P-DA value and repeat step 20.

- Table 27: functional check sequence -

7 After sale

7.1 Customer support

A complete customer support is active to help field installer or maintenance people to problem solving, that cannot be reached with all the information contained in the present user manual.

Check on the website www.computecelectronics.com/cdd6, about how to access to technical support.

7.2 Replacements

All the available replacement parts and the ordering information are available on the www.computecelectronics.com/cdd6 website. In addition to the CDD6 door controller, other parts can be ordered, as: power supply cable, complete connectors kit. The order codes and available parts are always updated on the reported website.

It is always necessary to contact technical support for further information or suggestion.

7.3 Material disposal

It is necessary to follow laws and rules of the country where the door drive is installed, to proceed with the correct disposal of the materials, both in case of packaging parts or in case of failed parts not returned.

8 General information

8.1 General considerations

Before starting any operation, it is mandatory to read and understand all the information reported in the present user manual.

8.2 Confidentiality agreement

The hardware and software/firmware components that forms the CDD6 device and all the: information, ideas, concepts, know-how are intended confidential and exclusive property of Computec.

All the information reported in the present user manual and any other support given by Computec, has to be considered confidential and property of Computec, that reserves the author rights: no parts can be copied or reproduced in any form.
All the information reported in the present manual cannot be forwarded to others, without the written permission of Computec, through authorized personnel.

The customer that use the CDD6 system, is implicitly committed to:

- not use the confidential information that are property of Computec,
- not re-project the CDD6 system

All the information reported in the present manual are checked and correct at the moment of the document release. In any case this does not constitute any obligation from Computec, that reserves the rights to apply modification considered necessary, also without any notification.

Computec declines any responsibility about any damage or claim caused to people, animals or things, due to errors or wrong interpretation/comprehension of the present document.

8.3 Safety

All the maintenance operation or cleaning performed on the automation or on the door, and the replacement of any component must be executed only after power supply has been interrupted. No maintenance operations different from the ones described in the present manual have to be performed. For any other failure detected on the door parts, contact the authorized technical support or qualified personnel.
It is forbidden to remove or apply change/falsify the plates and labels attached/printed/fixed from the manufacturer on the automation or on any related accessory parts.
In case the intended use of CDD6 system is in places where the presence of disabled, elderly, weak or with limited motorial skills people, it is suggested the supervision of responsible persons.
Don’t stay inside the movement range of the door to avoid risk or danger situation. The children must be taken under control to avoid that they play inside the movement range of the door.
The door (complete lift) must be put out of service in case maintenance intervention are necessary or in case the door is not in perfect working conditions.

8.4 Installation personnel Requirements

The installation of the CDD6 system must be executed exclusively by competent and qualified technical personnel, having all the technical and professional requirements provided by the current active legislation in the installation country.

The installer MUST check the conformity and compatibility of the doors to be driven with the CDD6 system, especially the door system must be compliant to the standards and codes also related to the safety of use.

The installer MUST execute all the system installation and commissioning operations, and operate when present power supply voltage coming from electric cabinets and/or branch boxes, and he has to be enabled to perform all the electrical and mechanical operations.

The installer MUST provide to the final customer all the information about the system behaviour, in normal or inspection mode.

The installer is the only responsible subject of any wrong installation, or of any non-compliance to the instructions reported in the present manual. The installer is responsible towards the customer or others about any damage to people, things, animals that are caused by wrong installation of the system.

8.5 User requirements

The user must be aware of all the necessary information reported in the present document.

8.6 Standard and codes reference

The CDD6 product is compliant to the following directives:

- 2006/42/CE Machine
- 2014/35/CEE Markings
- 86/188/CEE acoustic emission, modified according to 98/24/CEE
- 2014/30/UE electromagnetic compatibility

And according to the following particular codes:

- EN12015/EN12016
- EN13015
- EN81-1 EN81-2 (1)
- EN81-20/50 (1)
- AS1735 (1)

(1): compliance evaluated when coupled to the motors reported in the table “- Table 2: compatible motors data”.

The certified copy of the declaration of conformity for the product is reported in paragraph 9.1.

⚠: the codes compliance to the maximum reversing force and to kinetic energy limit (maximum and average), is considered at own installer responsibility, that has to measure all the necessary values with appropriate instrumentation.

8.7 Warranty

Computec guarantees the optimal performances only if the original parts are directly sold and correctly installed.

Computec furthermore:

- Reserves the rights to undertakes updates of the present document, that will be downloadable from the website reported, in its last revision
- Inside its continuous improvement politics, it reserves the rights to implement design and materials modification of the product.

Therefore:
parts produced or added to the Computec product, without previous Computec check or permission, or non-original parts based on the Computec design (even if supplied by authorized retailer), cannot be considered under warranty, as the following conditions are cannot be insured:

1. Raw material quality control
2. Process quality control
3. Product quality control
4. Compliance product test according Computec specifications (resumed in the technical data).
5. Conformity test according to Computec specifications

8.8 Final considerations

The present user manual has been written, keeping in consideration that the company installing Computec product, satisfies the following requirements:

- The personnel responsible of the system installation or maintenance must apply the General and Specific codes for safety and hygiene (89/391/CEE – 89/654/CEE – 89/656/CEE).
- The personnel responsible of the system installation or maintenance must be familiar and trained to the use of the Computec product
- The devices used for the installation and maintenance, must be in optimal operating condition and has to be calibrated when necessary (89/655/CEE)

9 Annex

9.1 Product conformity declaration (DDC)