Computec

CDD6

Computec Door Drive 6

Lift door controller

QUICK REFERENCE

Note: the complete user manual can be downloaded from the website www.computecelectronics.com

EN	CE			PRJ1166_01_07_03_01_00_QR	rev.01

EN

EN

Reference Codes and Standards

All the references to the Standards and Codes are reported in the user manual.

Door Drive Data

Supply Voltage	[100 ; 240]Vac 1-ph 50-60Hz, (115V – 20%, 230V + 30%)	Vac
Available Peak Output Power	300	VA
Nominal Output Power	200	VA
Operating temperature	[-10; +60]	°C
Humidity	[20;80] non condensing	%
Electrical Protection	Fuse [5x20, 4A] fast on the main power supply line Fuse [5x20, 8A] on battery power line	-
Environmental Protection	IP-54 case	-

Compatible motors data

(Code) Motor Type / Transmission / Encoder	Nominal power	Nominal Voltage	Nominal current
DC Motors			
(12) GR 63x25 + SG80K (15:1) + Enc100	50VA	24V	2.7A
(13) GR 63x55 + SG120 (15:1) +Enc100	100VA	24V	4.9A
(20) M63x50 + SN40 (15:1) + IGO100/2	100VA	24V	4.9A
(21) M63x25 + SN31 (15:1) + IGO100/2	100VA	24V	2.7A
(23) M48x60 + SN 22,6 (7:1) + IGO100/2	50VA	24V	2.6A
(01) Moog 1Nm (4:1 belt) + Enc500	100VA	24V	3.6A
(02) Moog 2Nm (4:1 belt) + Enc500	200VA	24V	6.0A
(03) Siboni 65PC132 (4:1 belt) + Enc500	150VA	65V	2.7A
Brushless Motors			
(14) BG 62x60 + SG120 (15:1) + Enc100	130VA	40V	3.9A
(16) BG 62x30 + SG80K (15:1) + Enc100	70VA	40V	2.2A
DC Motors for Magnet switches applications			
(05) DC 1Nm comp. F28/LMDC2010	-	-	3.6A
(06) DC 2Nm comp. F29/LMDC2011	-	-	6.0A
(07) DC 1Nm comp. Digidoor 1Nm	-	-	3.6A
(08) DC 2Nm comp. Digidoor 2Nm	-	-	6.0A

Installation

The installation of the drive has to be performed by expert technical personnel, having all the professional requirements expected, based on the active law in the installation country.

Before proceeding with the installation of the device, please verify the necessary safety equipment; check also the necessary instrument to execute all the installation operations. Be sure to work in safe conditions, taking the complete system in inspection mode before starting any activity.

The CDD 6.0 device works inside the complete car door operator, consisting of:

- Mechanical Door Operator: panels, carriages, belt, motor.
- Door drive (the CDD6)
- Parallel or CAN bus interface to the main lift controller

EN

Below it is represented the Device Connection Scheme:

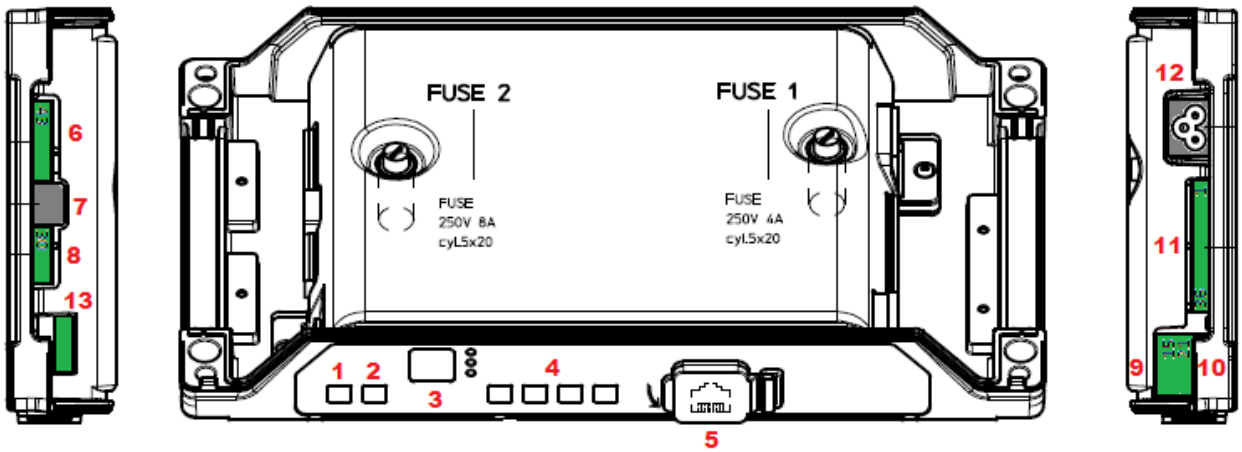

The door controller has:

N°	ID	Descrizione
1	ON	Power on button
2	OFF	Power off button
3	Display	7-segments (2 digits) for the visualization of the door drive status or programming
4	“1” “2” “3” “4”	Functional buttons for visualization/movement/programming
5	X8	external device connection for diagnostic, configuration and upgrade
6	X4	Motor and battery connector
7	X5	RJ45 Motor encoder connector
8	X9	Direct connection for light curtains, including 24Vdc power supply
9	X3.1	Connection of the commands from main lift controller
10	X3.2	Connection of the local contacts installed on the car
11	X2	Connection of the outputs to the main lift controller
12	X1	Connection of the main power supply
13	X10	CAN bus connector

Please refer to the self-explicative cover sticker (reported below) for the connection details.

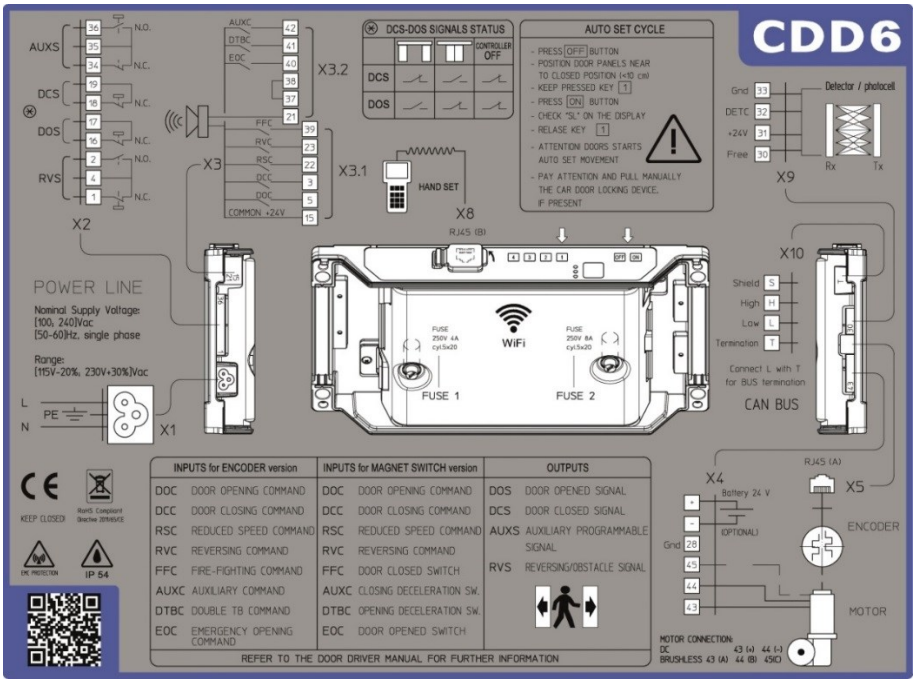

EN

Preliminary mechanical checks

Before proceeding with the installation of the drive, it is necessary to check the condition of the mechanical door operator: correct installation of the panels, correct installation of the carriages, correct installation of the transmission (belt and belt fixations), correct installation of the gear-motor according to the table reported on the previous page.

Verify that the panels movement results free, without obstacle or friction overall the complete door clearance.

Verify the material of the box: CDD6 door drive, retrofit fixation bracket.

Mechanical installation

The mechanical installation of the door drive has to be executed according to the controller type to replace. For this reason, the CDD6 is supplied with the retrofit fixation bracket. The following table shows the two fixation possibilities:

Installation with retrofit bracket	Direct installation
1. Switch off the main power supply 2. Remove all the connection from the old controller 3. Remove the controller to be replaced 4. Remove the cover of the CDD6. Apply the retrofit bracket to the CDD6 5. Install the controller, using the fixation holes aligned to the holes present on the operator. 6. Apply the previous fixation screws 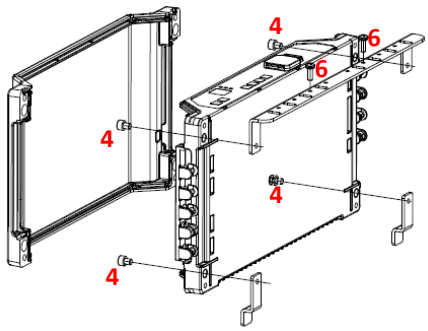	1. Switch off the main power supply 2. Remove all the connection from the old controller 3. Remove the controller to be replaced 4. Remove the cover of the CDD6 5. Apply the drive using the four fixation points present on the operator. 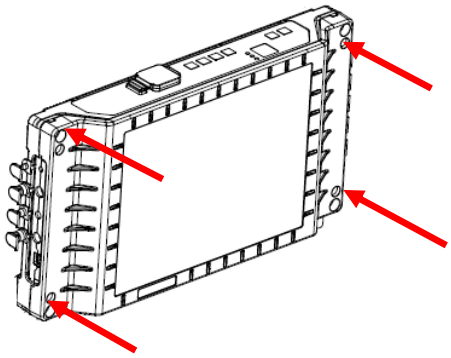

EN

Check of Electrical parts

Verify the presence of the correct supply voltage, as reported in the technical specifications.
Once the mechanical installation of the CDD6 drive is completed, proceed as reported below.

STEP	Operation	Description
0	Preliminary checks	Press OFF button on the door drive front panel. Be sure that no power supply is present.
1	Motor connections 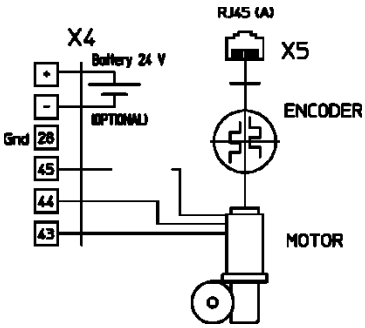 	1.Connect the motor cable to the pins: PIN / Description / Wire Color 43 / Positive (phase A for brushless) / BROWN (1 for BRLS) 44 / Negative (phase B for brushless) / WHITE (2 for BRLS) 45 / Phase C for brushless / 3 for BRLS of the X4 connector. Keep in any case the previous connection order, in case no numbering rings are present, or in case the wires color is different from the one described. 2.Connect the encoder cable with its RJ45 male to the X5 connector. 3.If present, connect the external battery kit to the positive (+) and negative (-) pins of the X4 connector.
2	MLC interface connection 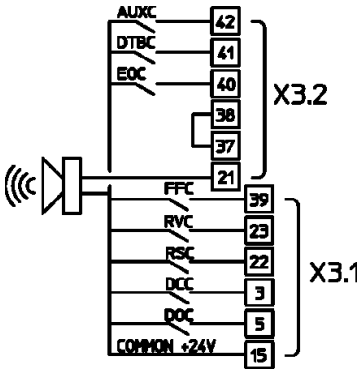 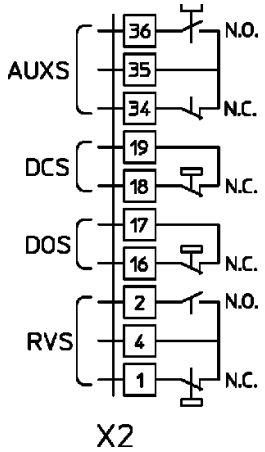 	In case of different controllers replacement with different plugs proceed as following reported, otherwise plug the previous connectors as they are. Check the common voltage used, and the used contacts: **Common** / **Connections** Controller 24V / Check the presence of the 37-38 bridge as GND reference External 24V (MLC) / Remove the 37-38 bridge, only in case there are no local contact installed on the car roof For further information, please refer to the user manual Connection of the MLC commands and of the local contacts: **PIN** / **Name** / **X3.1 Pin Description** 15 / 24V / Auxiliary CDD 24V, available for MLC commands 5 / DOC / Opening command 3 / DCC / Closing command 22 / RSC / Reduced speed (closing) command 23 / RVC / Reversing command from detector 39 / FFC / Fire-Fighting mode enable input **PIN** / **Name** / **X3.2 Pin Description** 42 / AUXC / Programmable Auxiliary input 41 / DTBC / Second TB management input 40 / EOC / Battery Evacuation floor input 38 / 0V_IN / GND input for the photo-coupled inputs 37 / 0V_DD / Auxiliary GND of the drive for the inputs 21 / BUZS / Contact for Acoustic signal For further information, please refer to the user manual
3	Power supply connection 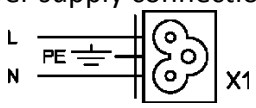 	Nominal power supply voltage: [100 – 240] Vac [50-60] Hz, single phase Range: [115-20%, 230+30%] Vac
4	Final checks	Verify that ALL the signals are connected **and apply the cover**. For further information please refer to the user manual

EN

HMI user interface

EN

The CDD6 door drive has a front panel that allows to activate different functional modes: Normal, Inspection, Configuration

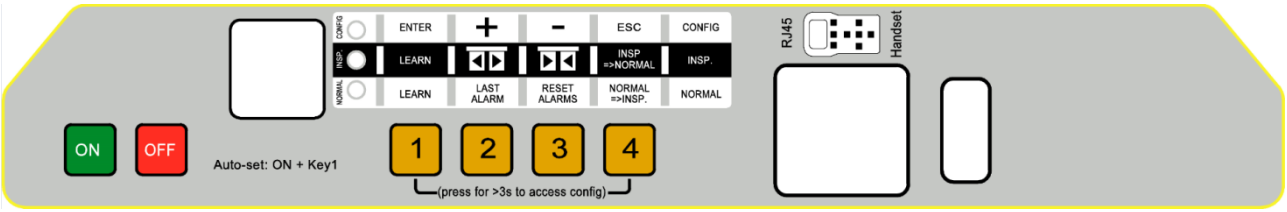

MODE		NORMAL	INSPECTION	CONFIGURATION
Description		Normal mode (automatic): the door drive executes the commands from MLC	Inspection mode (manual): the door drive executes commands from the panels keys	Configuration mode: parameters Programming
LEDS	NORMAL	**ON**	OFF	OFF
	INSP	OFF	**ON**	OFF
	CONFIG	OFF	OFF	**ON**
KEYS	**1**	Key 1 and key 4 pressed together per t>3s: Configuration mode access		**Enter** Access to parameter value OR Parameter value saving and return to parameters list
	2	Pressed and keep pressed (t>3s): Last alarm code showed (“no AL” if no alarm present)	Door opening Pressed and keep pressed (t>5s) together key 3: enable or disable Motor torque	**+** Increase Parameter index, OR Increase Parameter value
	3	Pressed for t>3s when last alarm is showed: reset of the last alarm codes (“no AL”)	Door closing Pressed and keep pressed (t>5s) together key 2: enable or disable Motor torque	**-** Decrease Parameter index, OR Decrease Parameter value
	4	Access to **Inspection** mode (if only key 4 pressed for t<1s) Access to **Configuration** mode (if Key 1 and key 4 pressed together for t>3s)	Return to **Normal** mode	**Esc** Exit from parameter selection OR Exit from Configuration mode and return to Normal mode
DISPLAY		Door drive status showed: “- -“, “OP”, “CL”, “IM”, “AL”, ..	Door drive status showed: “- -“, “OP”, “CL”, “IM”, “AL”, ..	Parameter list: “P” alternate to the parameter index. Parameter modification: parameter value showed
NOTES		This is the default mode at the power on of the door drive. ALL inputs are active	ALL the signal from the MLC are not active	Parameter selection: “P” showed alternate to the parameter index

EN

Door set-up, Learning and functional test

EN

Once the installation phase described in the previous paragraph is completed, it is possible to proceed with the power on of the device and its configuration. In case of problems during the execution of the phases, please refer to the user manual.

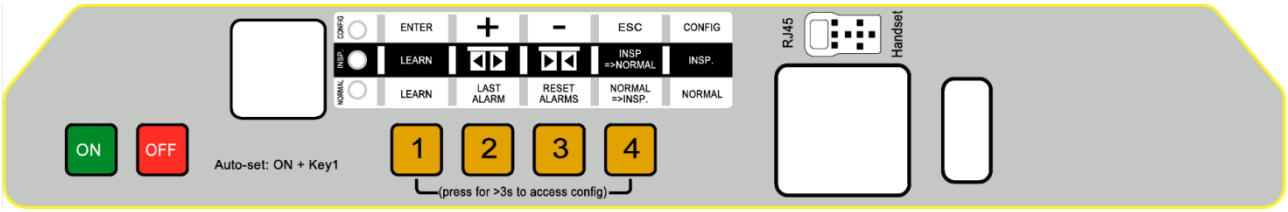

STEP	Operation	Description	Notes
1	**Power supply test**	Connect the main power supply. Press ON key and checks the front panel display as indicated. Then press OFF key.	“88” followed by “- -“
2	**AUTOSET execution**	Put the door panels near to the panels closed position (gap<10cm), then press and **keep pressed key** 1 on the door drive front panel. Press ON key, checking that “SL” is shown on the door drive display, **then release key** 1. **Floor with DTBC contact active (not available for magnetic switches application)**: AUTOSET for second TB floor will start automatically. The door starts the auto-set procedure auto-detecting: - the closing rotation - the skate space - the door movement space - the door closing torque profile to optimize the closing force detection - the opening profile. In case the of errors or alarms, proceed with the checks suggested in the user manual. To optimize the execution of the learning procedure, it is suggested but not necessary to couple car and landing door, executing the operations from the car roof in inspection mode. The learning phase is completed.	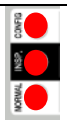 NORMAL, INSP. and CONFIG LEDS are all ON “SL” fixed Auto-set for DTBC contact: “S2” fixed In case or error: “Er” alternate to the error code In case of alarm “AL” alternate to the alarm code “OP” fixed

<table>
<tr>
<td>3</td>
<td>Door operator configuration (check & set)</td>
<td>Check and Configure the parameters related to the installed door operator (please refer to paragraph 5.1):
<table>
<tr><td>P05</td><td>SET</td><td>Car door locking device:
0 = not present,
1 = present</td></tr>
<tr><td>P22</td><td>CHECK</td><td>Motor Closing rotation:
0 = clockwise
1 = counter-clockwise</td></tr>
<tr><td>P28</td><td>CHECK</td><td>Skate type:
02 = S20
09 = S90
12 = S120</td></tr>
<tr><td>P90</td><td>CHECK</td><td>Installed motor type:
00 = self-recognized
XX = manual selected motor type</td></tr>
<tr><td>P91</td><td>CHECK</td><td>Self-recognized motor type:
00 = autoset procedure requested!?
XX = recognized motor type</td></tr>
<tr><td>P99</td><td>SET</td><td>MLC commands logic
0 = H active and RSC forced closing
1 = L active and RSC reduced speed
2 = H active and RSC reduced speed
3 = L active and RSC forced closing
4 = CAN BUS</td></tr>
</table>
</td>
<td>Refer to paragraph 4.3.2 for the information about access to Configuration Mode.</td>
</tr>
<tr>
<td>4</td>
<td>Inspection mode</td>
<td>Put CDD6 in inspection mode by pressing key 4 and check the INSP. LED is ON.</td>
<td>INSP. LED is ON</td>
</tr>
<tr>
<td>5</td>
<td>Speed Profiles check in Inspection mode</td>
<td>Press continuously key 3 to execute the door closing with normal speed, until the door is completely closed.

Press continuously key 2 to execute the door opening with normal speed, until the door is completely opened.

In case it is necessary to tune the speed profiles, please refer to the paragraph 5.2.1</td>
<td>Display visualization:

“CL” blinking
“CL” fixed

“OP” blinking
“OP” fixed</td>
</tr>
<tr>
<td>6</td>
<td>Check of door movements and reversing in NORMAL MODE</td>
<td>Check the door movements with the door drive in NORMAL mode (press key 4 if INSP mode is active), to check the commands from the lift controller to:
- move the door in opening and closing
- Door reversing in case of obstacle
- Door reversing from light curtains signal</td>
<td>LED NORMAL ON</td>
</tr>
</table>

Installation Trouble-shooting

The installation sequence previously reported describes all the steps that have to be executed to operate a correct and complete set-up of the door system.

In case of issues, or anomalous behaviors happen during the installation, please refer to the user manual, part related to problems and solutions.

For any alarms, please refer to the user manual, part related to the Alarms.